Voron Design

Voron 0 Assembly Guide: 12. Final Mechanical Assembly

Written By: John Gilbert

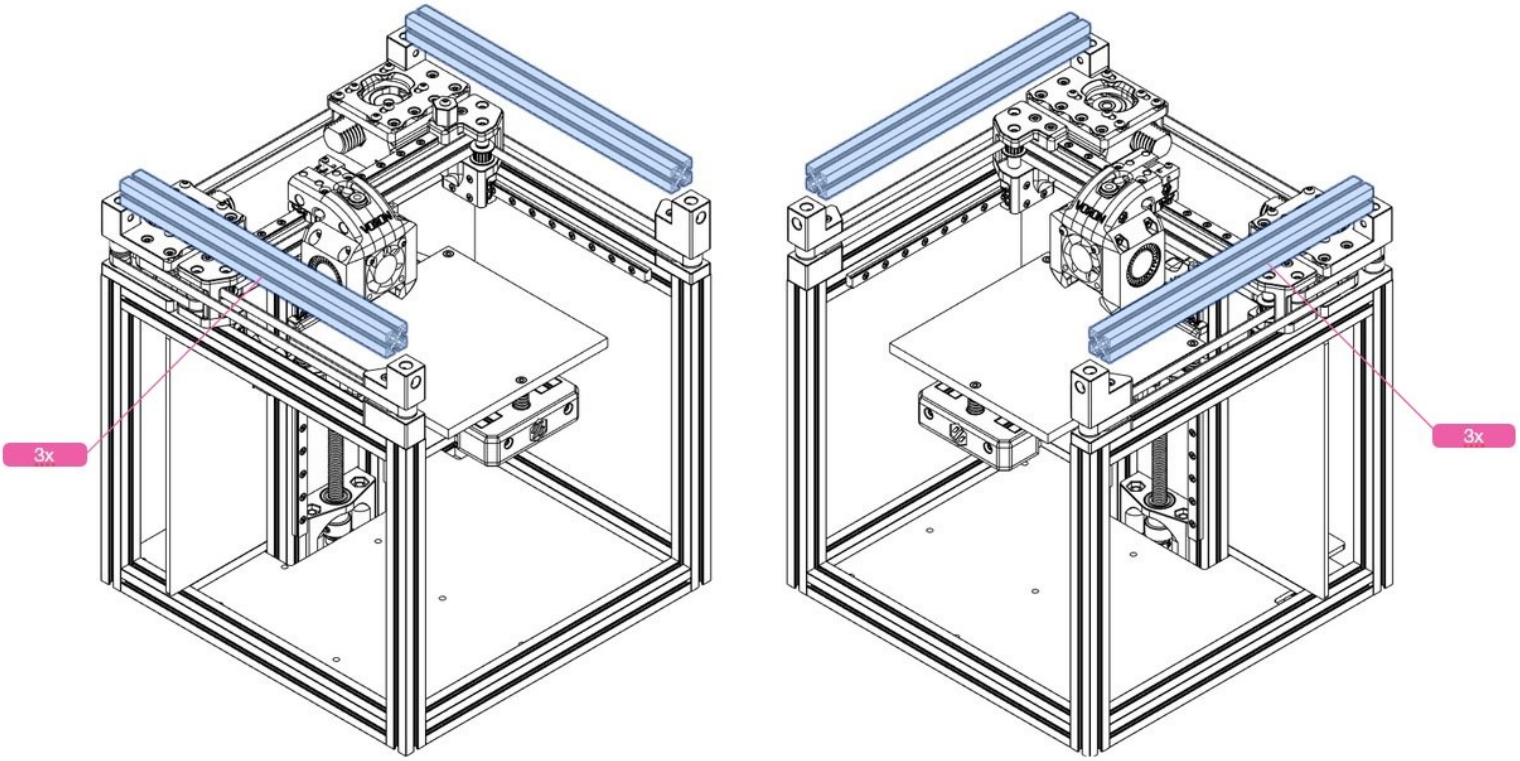

This document was generated on 2024-01-06 08:18:27 AM (MST).

TOOLS:

- Hex Key Set or Drivers (1)

PARTS:

- M3 Nut x 26 (1)
- M3 x 10 BHCS x 4 (1)
- M3 x 35 BHCS x 4 (1)
- Rubber Foot x 4 (1)
- M3 x 8 BHCS x 12 (1)

© 2024

Step 1 — Add Top Beams

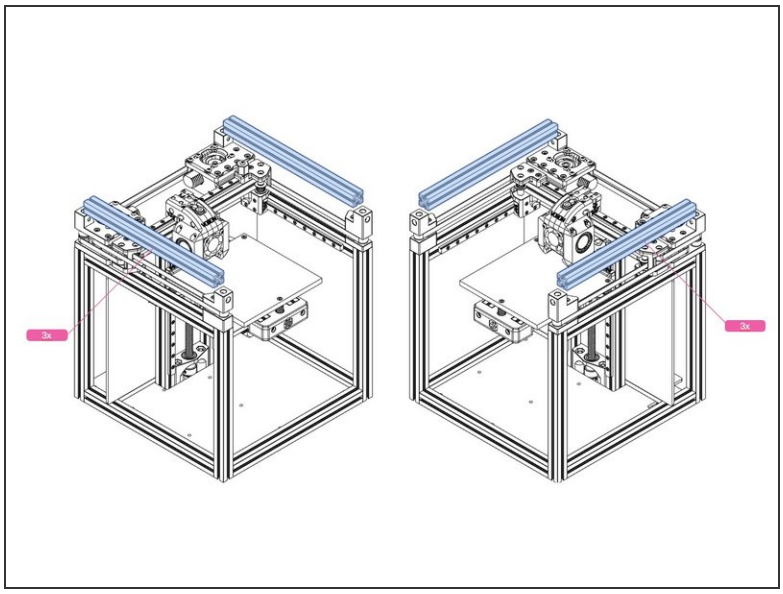

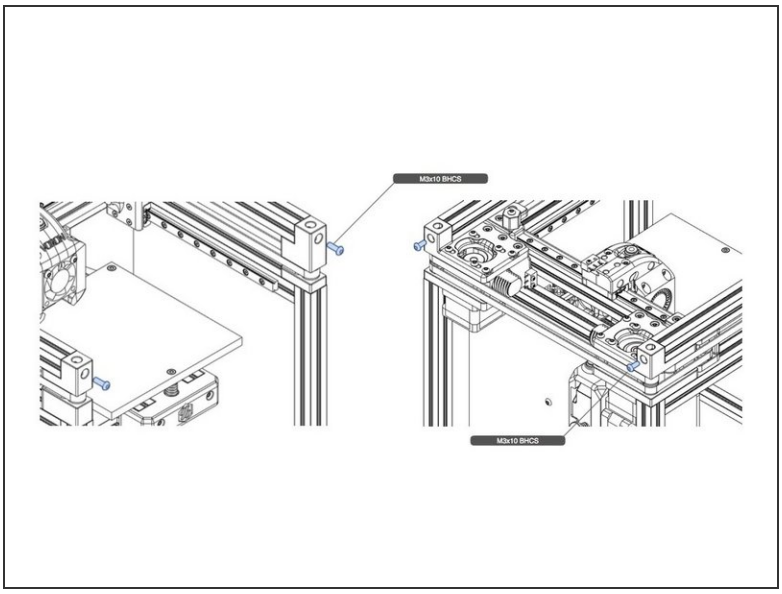

- Attach the top beams as shown.
- Note the pre-insertion of M3 nuts.

Step 2 — Belt Tension Knobs

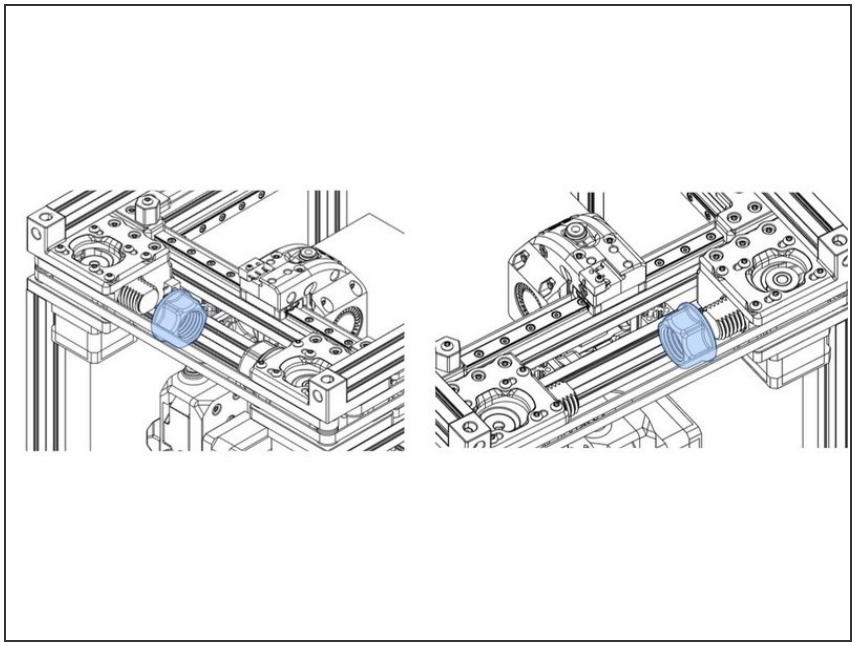

- Install the belt tensioning printed nuts.

Step 3 — Add More Nuts

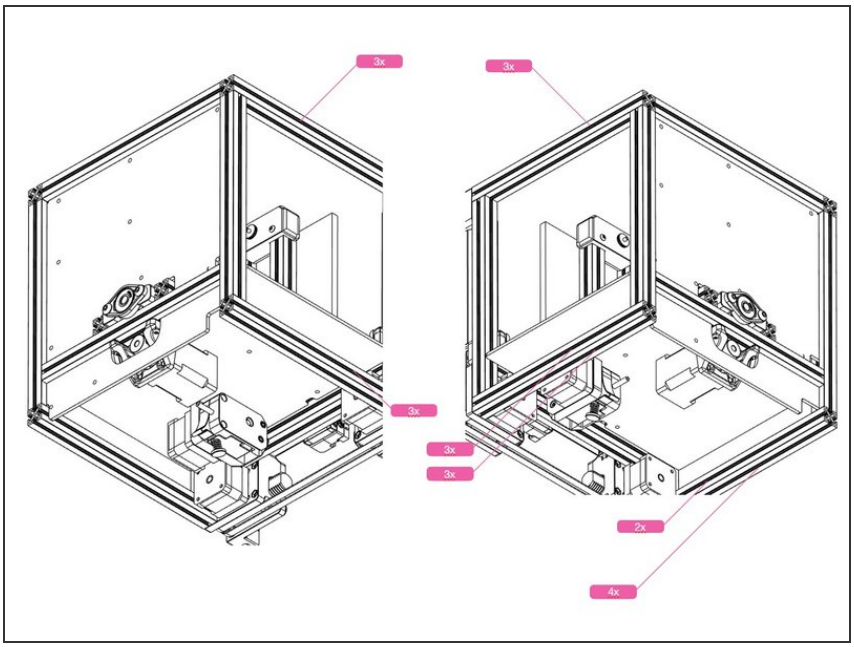

- Add nuts as shown.
- Double check.

Step 4 — Attach Feet

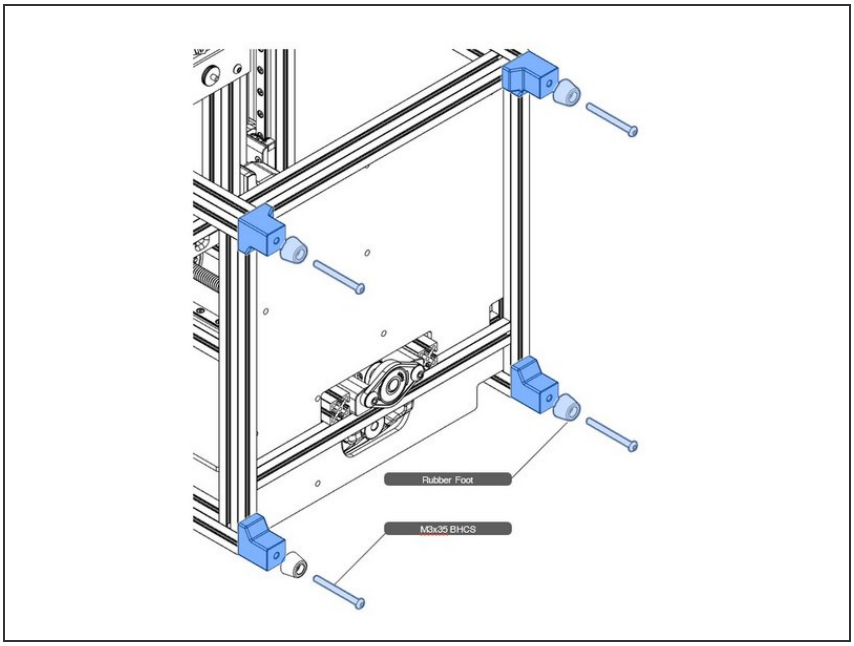

- Add printed legs and purchased feet, as shown.

Step 5 — Attach Skirts

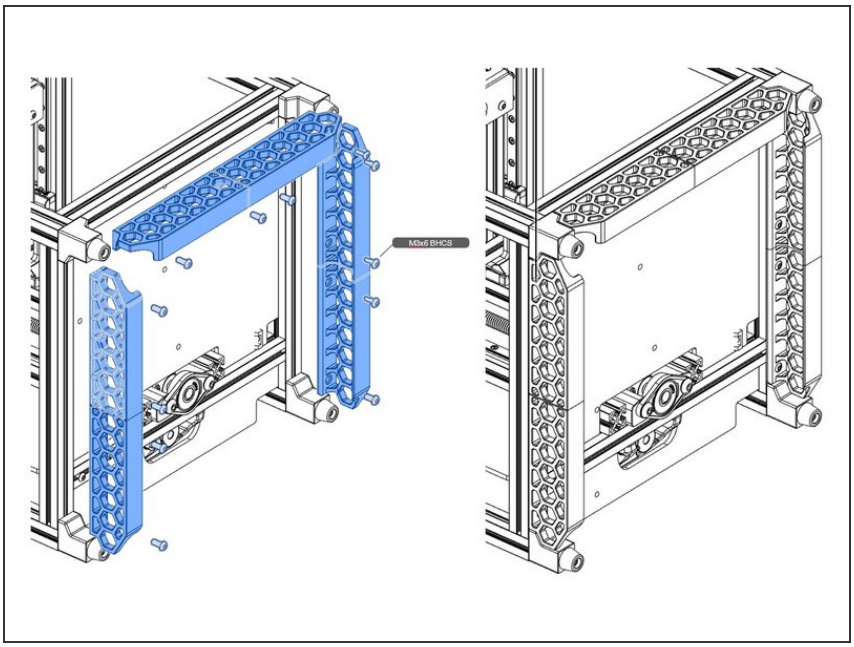

- Attach the skirts. A ball end hex drive may be helpful in tightening the skirt screws.
- The mechanical assembly is now complete. Congratulations!