Voron Design

Voron 0 Assembly Guide: 08. Extruder Mounting

Written By: John Gilbert

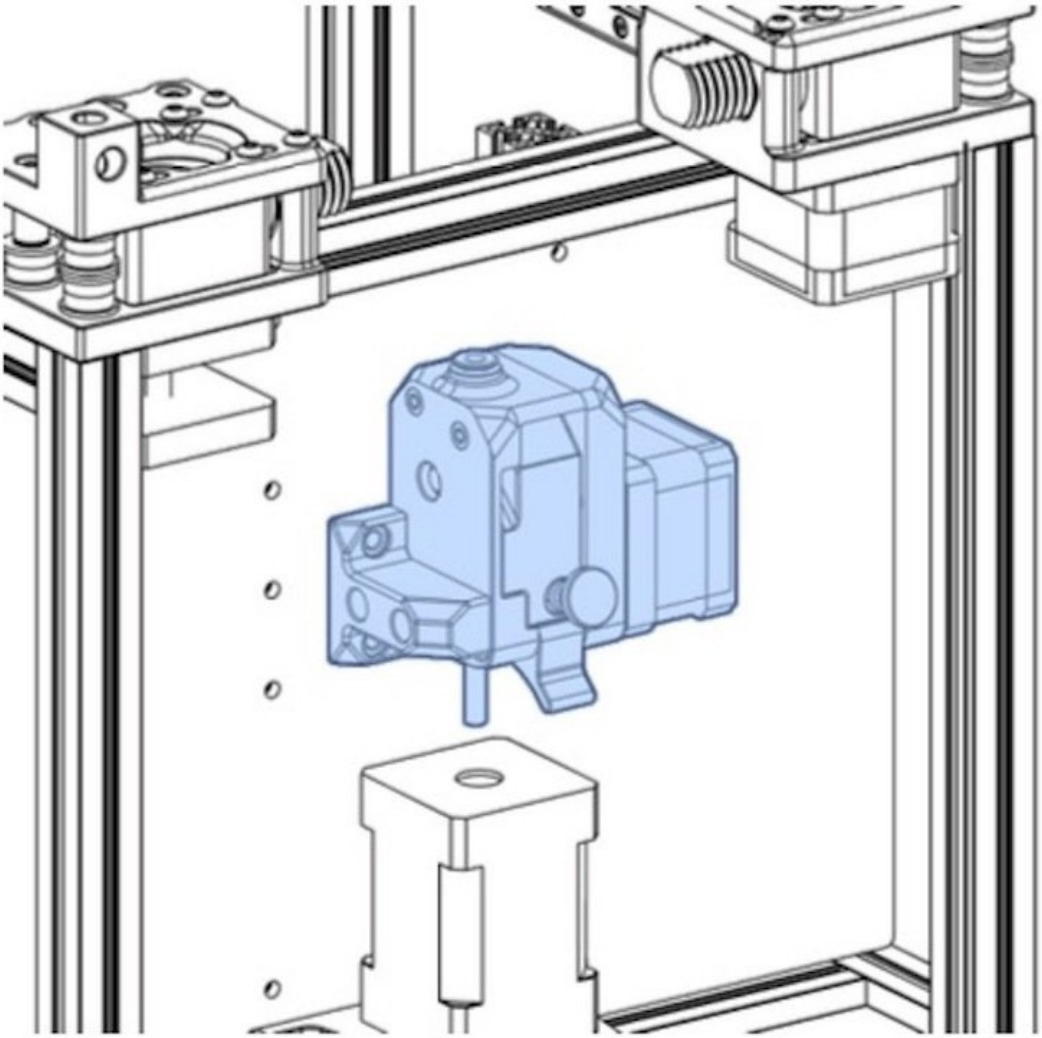

This document was generated on 2024-01-06 03:37:58 AM (MST).

TOOLS:

- Hex Key Set or Drivers (1)

PARTS:

- M3x12 BHCS × 2 (1)
- 20mm Bowden tube (3mm ID 4mm OD) (1)

© 2024

Step 1 — Voron 0 Assembly Guide: 08. Extruder Mounting

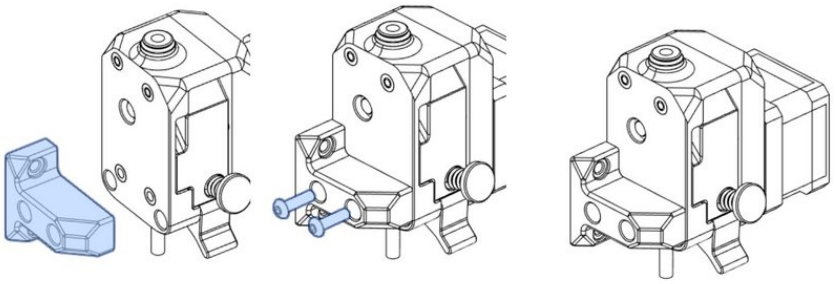

- The instructions for building the Voron Pocketwatch Extruder is in a separate Assembly Manual & Guide. What follows is how to attach it to the Voron 0.
- Attach the extruder mounting bracket as shown.
- Before attaching the extruder in the next step, add about a 20mm piece of Bowden tube to the filament inlet. Push the tube in until it seats in the plastic.

Step 2 — Attach Extruder

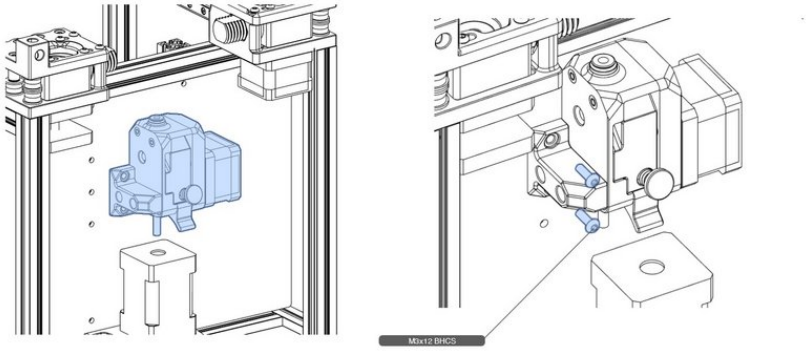

- Attach the extruder through the back panel into the Z vertical extrusion. Placing the printer on it's front face will let the nuts sit still while you attach the extruder. If you pre-installed the screws in a previous guide, attaching the extruder should be easier.

Step 3

- Voron 0 Assembly Guide: 09. Bed Preparation and Attachment