Voron Design

Voron 0 Assembly Guide: 07. Y/Z Endstops and Idlers

Written By: John Gilbert

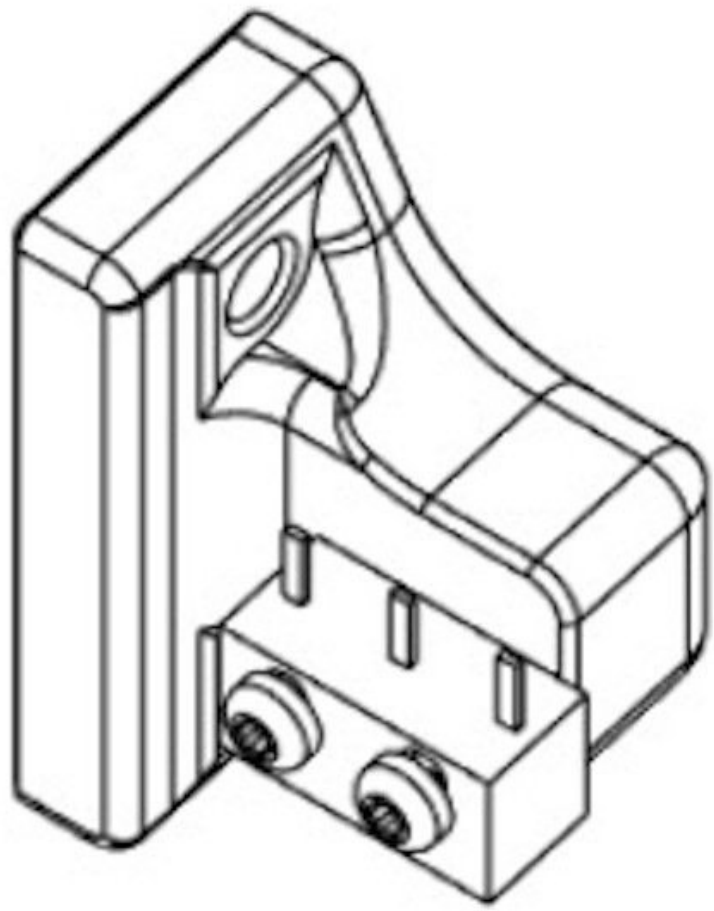

This document was generated on 2024-01-05 10:54:56 PM (MST).

TOOLS:

- Hex Key Set or Drivers (1)
- Small Philips Screw Driver (1)

PARTS:

- Omron D2F-5L x 2 (1)
- M2x10 Self-Tapper × 2 (1)

© 2024

Step 1 — Y Endstop

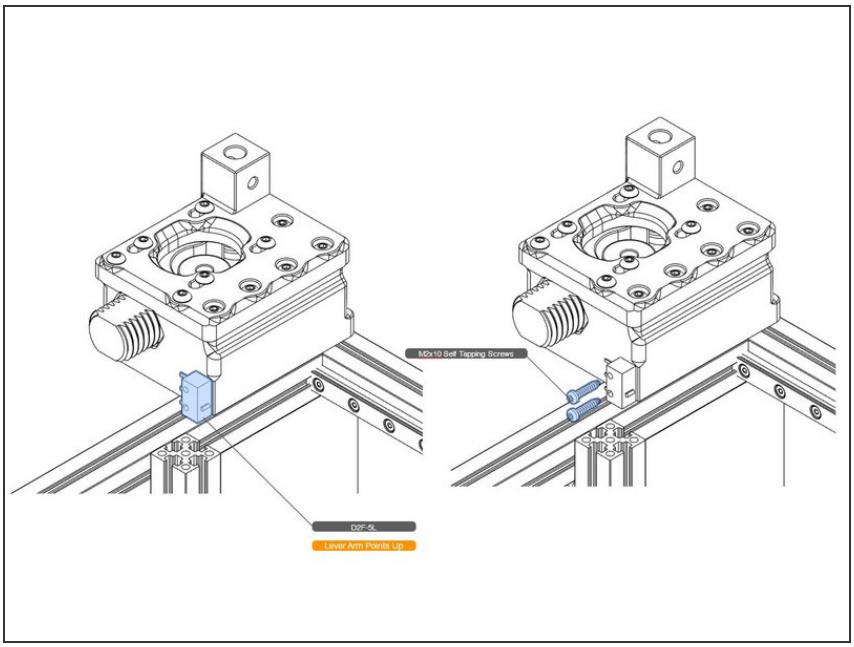

- Self tapping screws are used to attach the Y and Z endstop microswitches.
- It is easier to make the solder connections prior to installing the switches. You can roll up and tape the wires to keep them out of the way for the rest of the build.
- Not shown in the illustration is the contact lever arm. It points up when attached.

Step 2 — Z Endstop Adjustment and Trigger Post

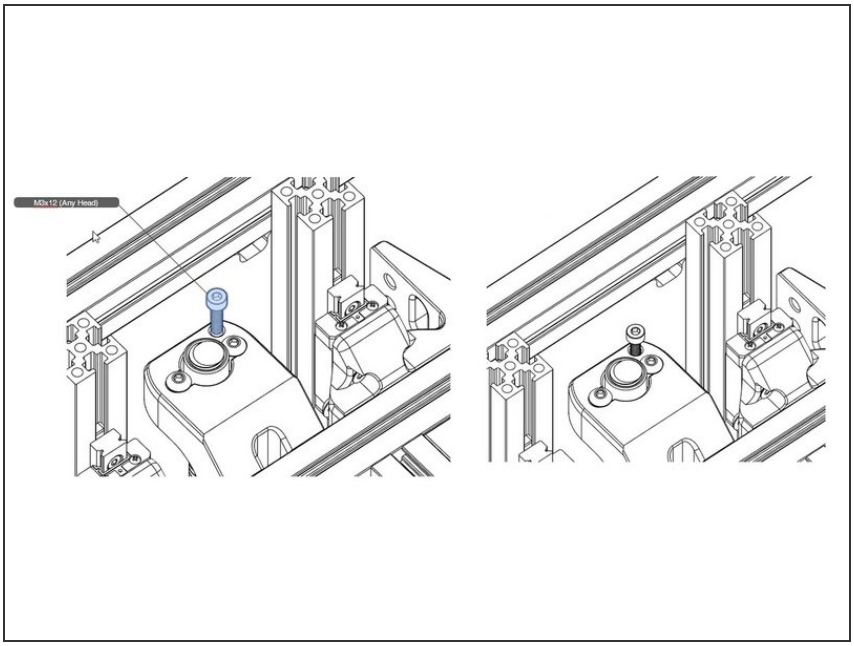

- An M3 screw is used as the Z endstop trigger, and can be used for minor adjustments.

Step 3 — Z Endstop Switch Attachment

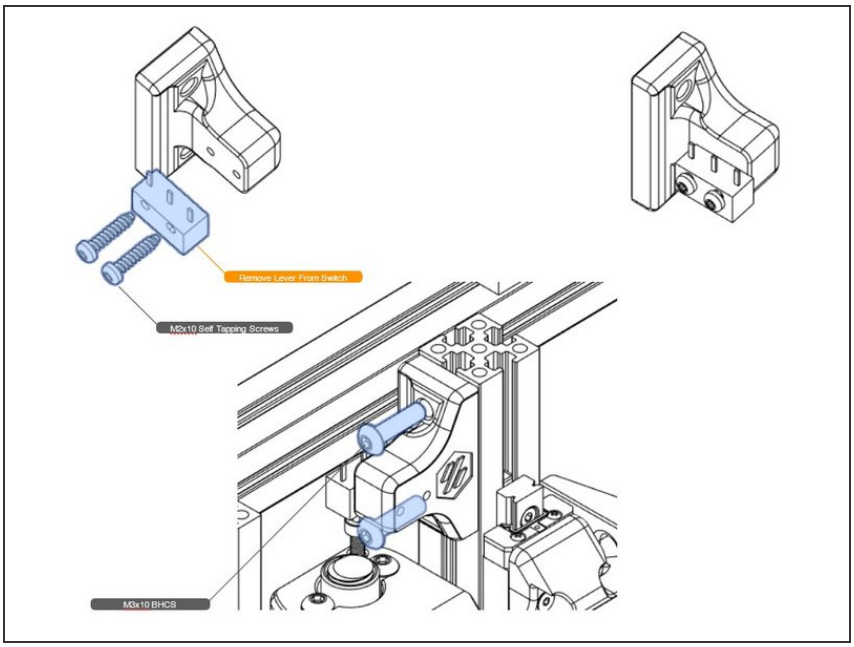

- Attach a pre-wired switch to the Z endstop block as shown using self-tapping screws.
- Attach the block to the vertical extrusion. Adding the nuts to the screws before insertion is helpful. Check that the trigger post and switch line up properly.

Step 4 — Idlers

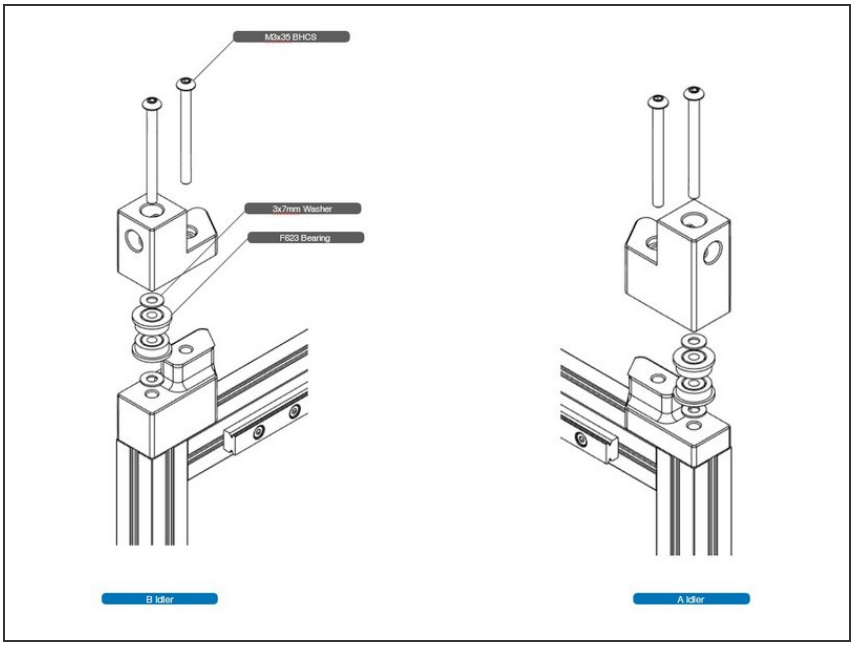

- Attach idlers as shown. Note the order of the bearing and washer parts.
- Don't worry about snugging the bolts up yet, you'll find it useful to loosen them when we do the belts.

Step 5

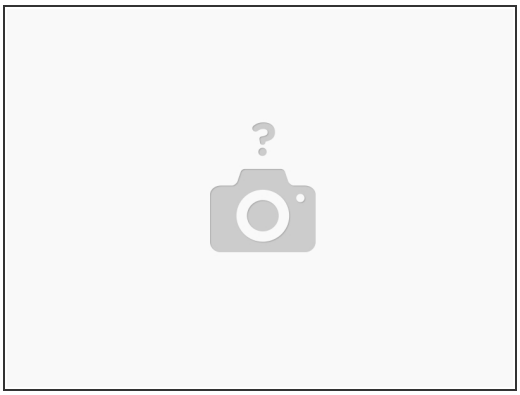

- Voron 0 Assembly Guide: 08. Extruder Mounting

© 2024