Voron Design

14 - Attach Panels/Extruder

Written By: ArmyAg08

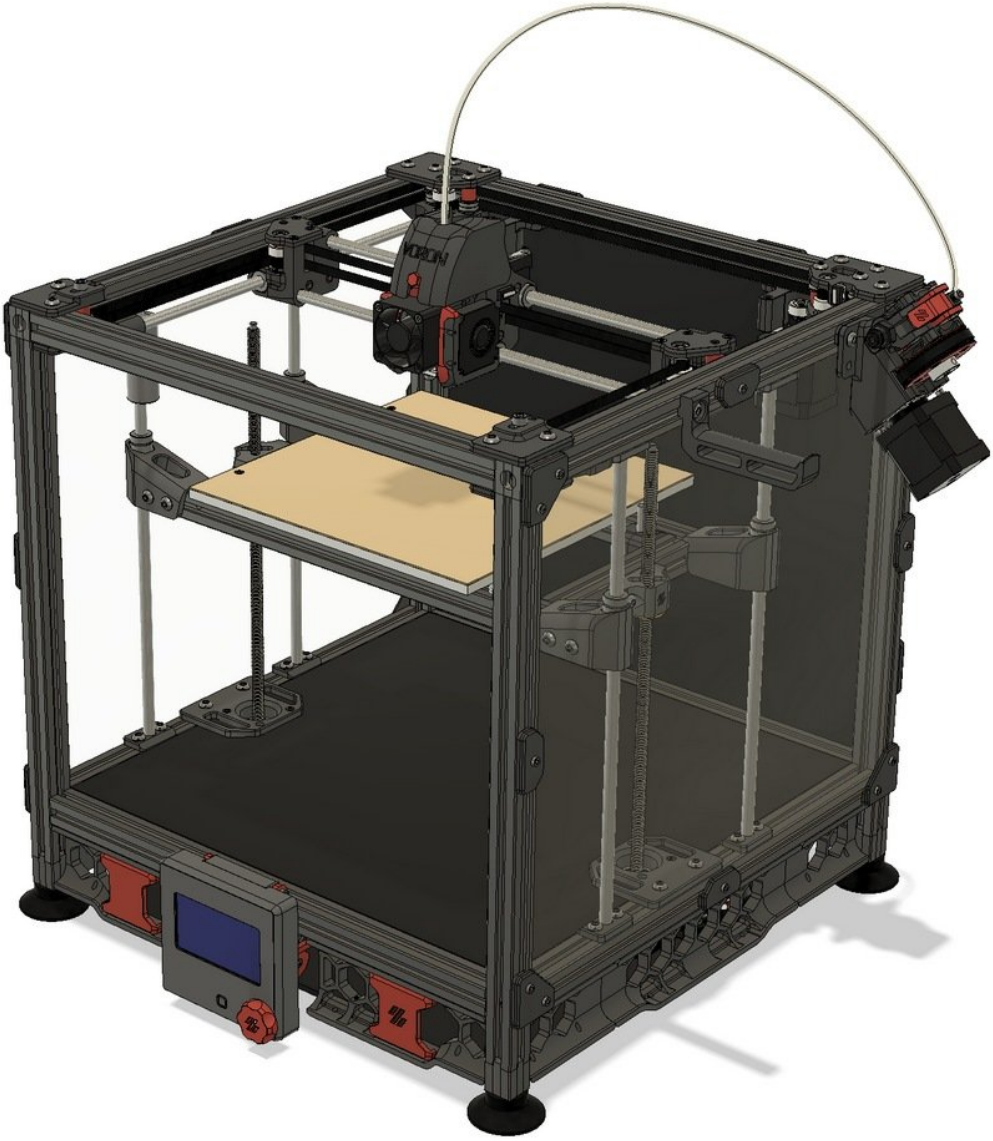

This document was generated on 2024-01-06 06:07:49 AM (MST).

TOOLS:

- Allen Key Set (1)

PARTS:

- M3x8 SHCS (21)
- M3x10 SHCS (8)
- M5x10 BHCS (1)
- M5x12 (2)
- Bowden Tube (1)

© 2024

Step 1 — Attach Back Panel

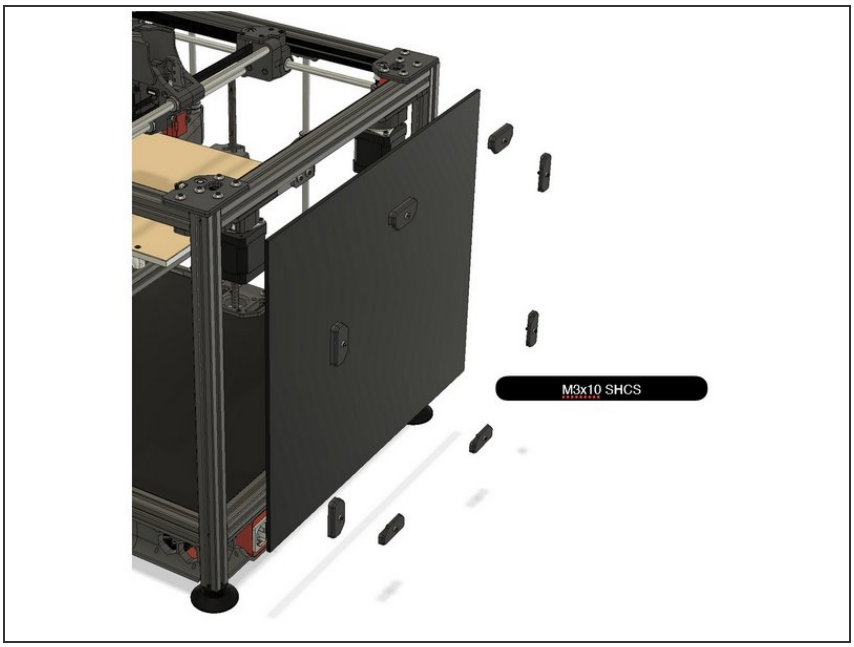

- Insert wisdom here.

Step 2 — Attach Side Panels

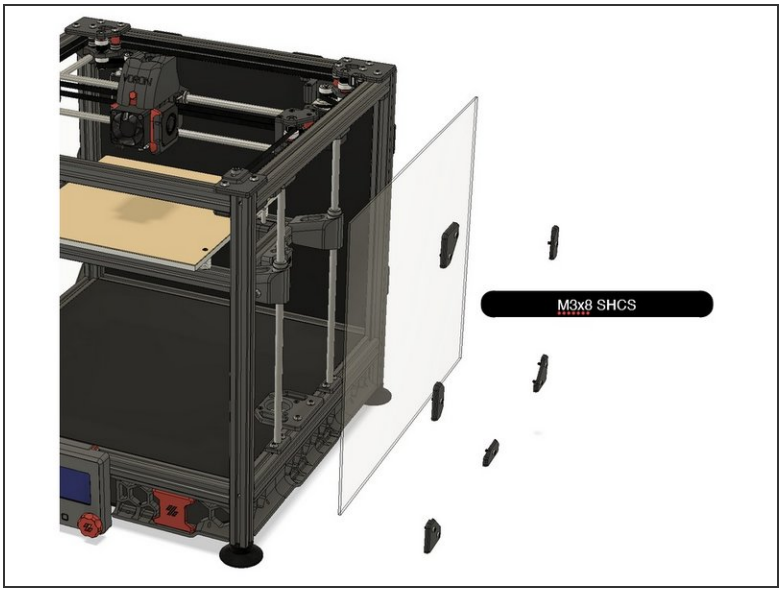

- Insert wisdom here.

Step 3 — Attach Extruder

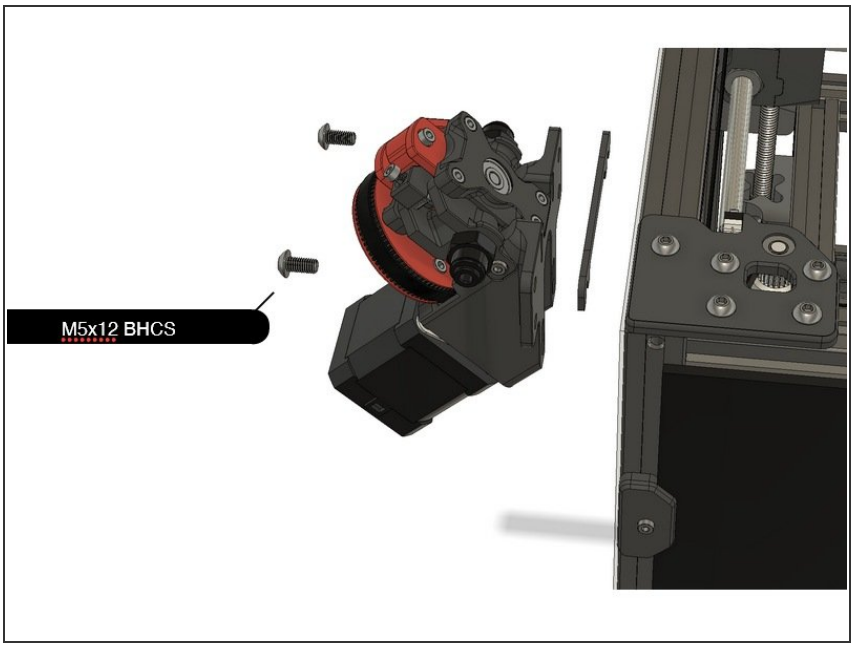

- Insert wisdom here.

Step 4 — Attach Spool Holder

- Insert wisdom here.

Step 5 — Attach Bowden Tube

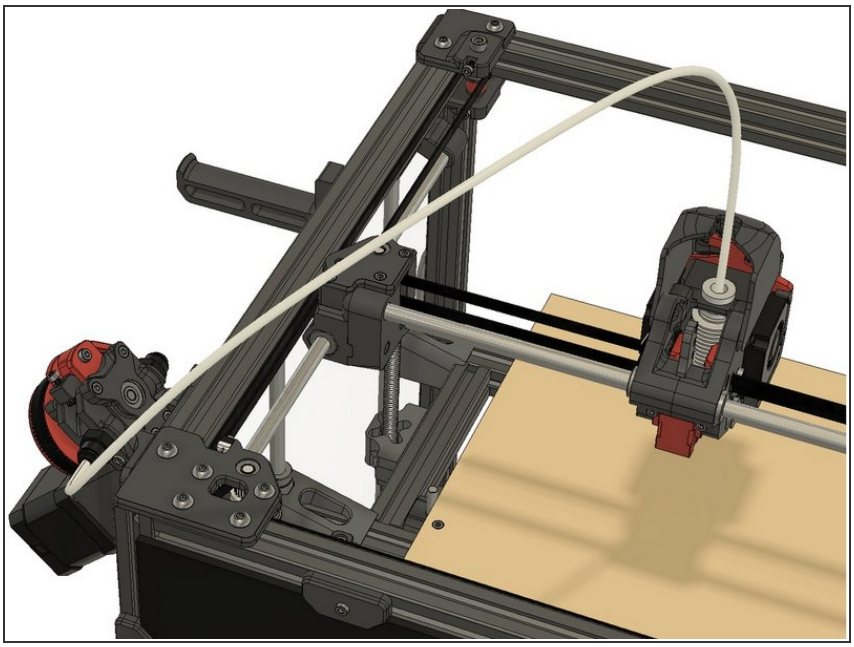

- Insert wisdom here.