Voron Design

13 - Assemble Electronics Compartment

Written By: ArmyAg08

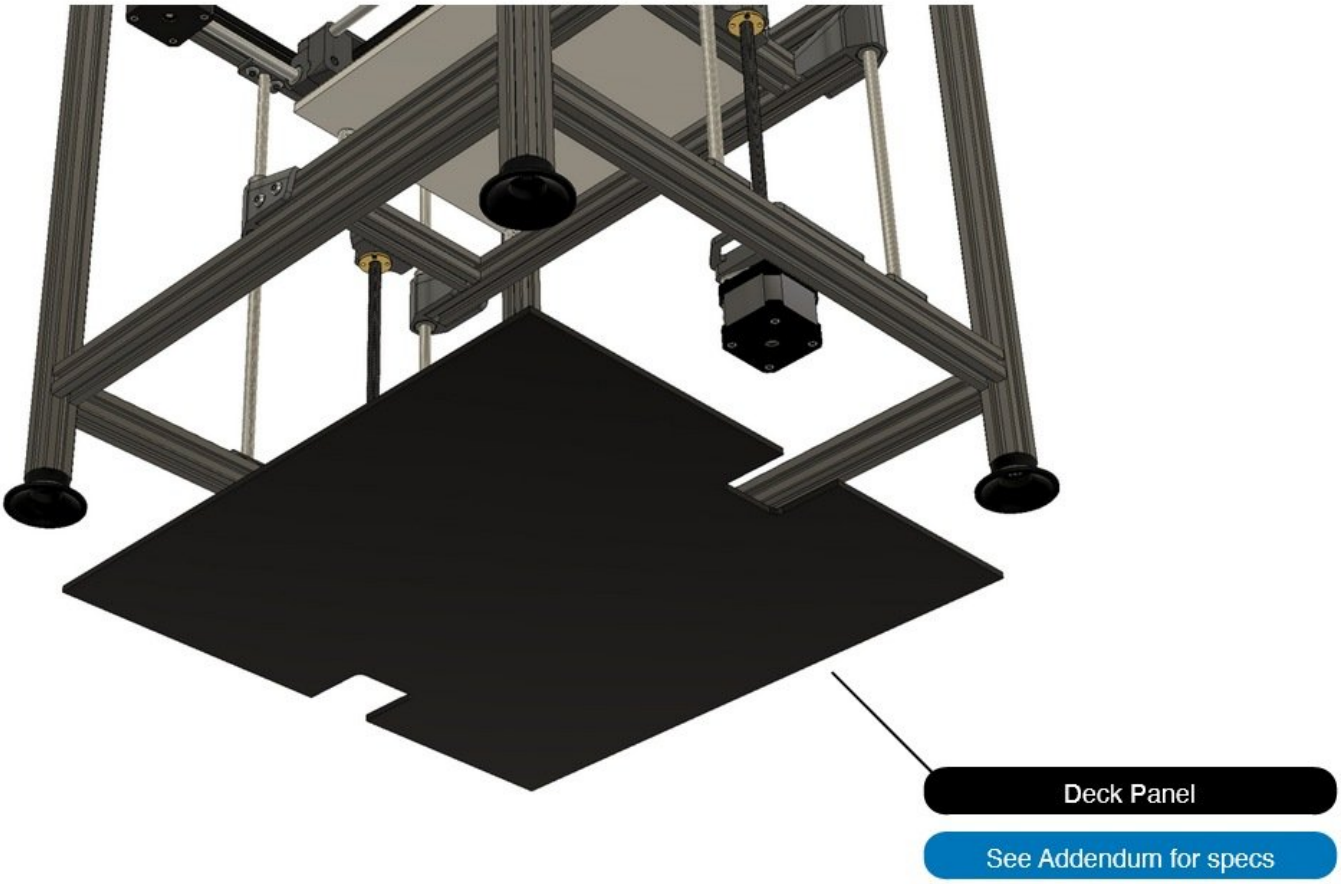

TOOLS:

- Allen Key Set (1)

PARTS:

- M4x8 BHCS (3)
- M5x10 BHCS (3)
- M3x8 SHCS (2)
- M3x20 SHCS (5)
- M3x10 SHCS (20)
- AC Inlet (1)
- VHB Tape (1)
- M3x12 SHCS (6)

Step 1 — Attach Deck Panel

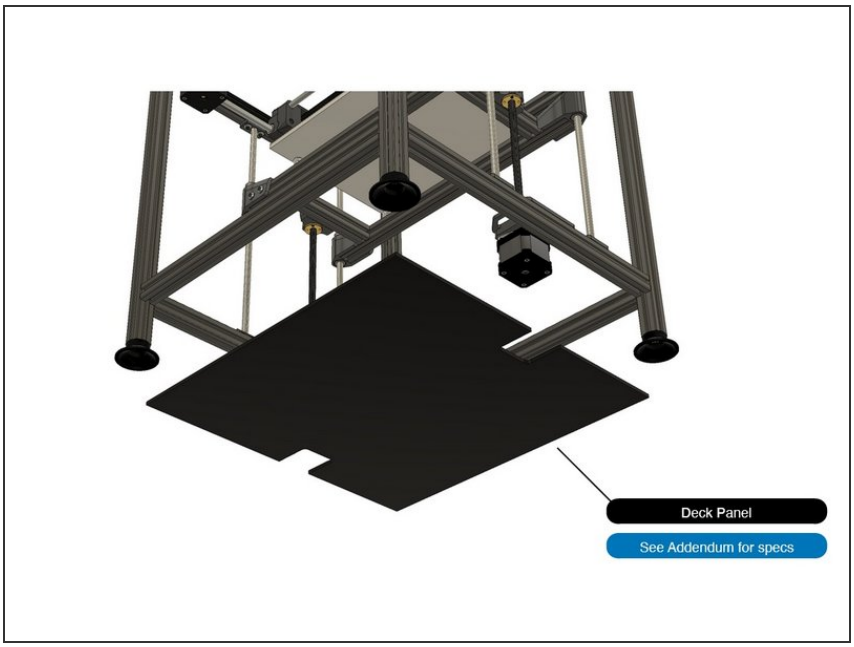

- If you use the RepRap display from the previous step, you will need to remove it to slide the deck panel in place.

Step 2 — Assemble PSU

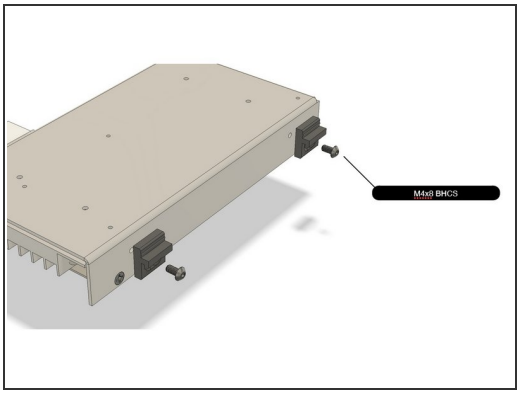

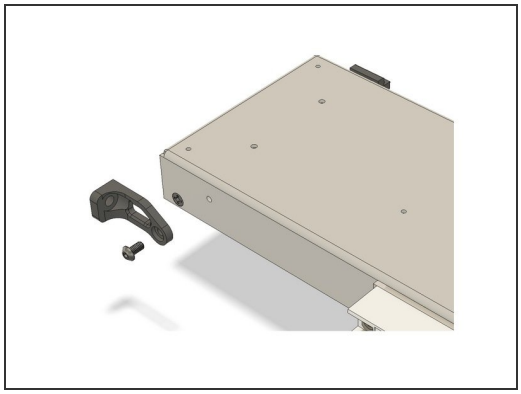

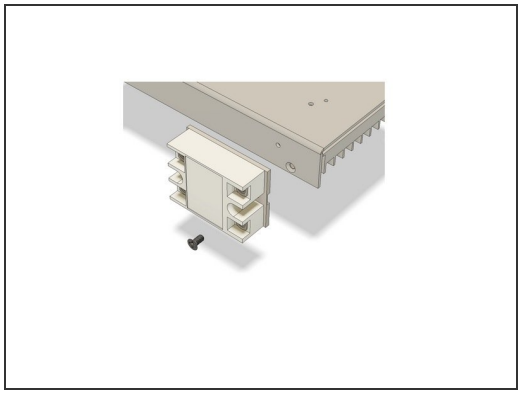

- Insert wisdom here.

Step 3 — Attach PSU to Frame

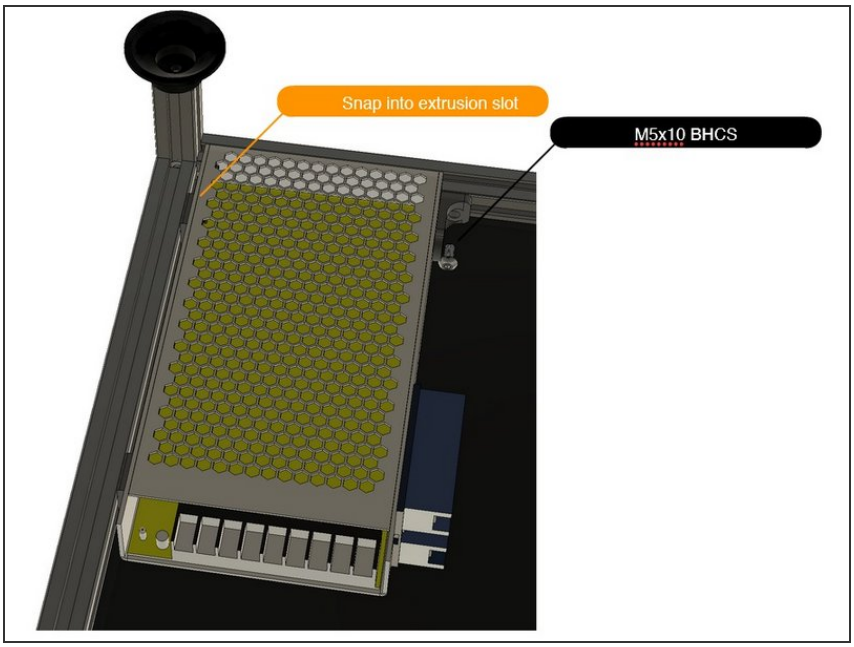

- Insert wisdom here.

Step 4 — Assemble RAMPS Board

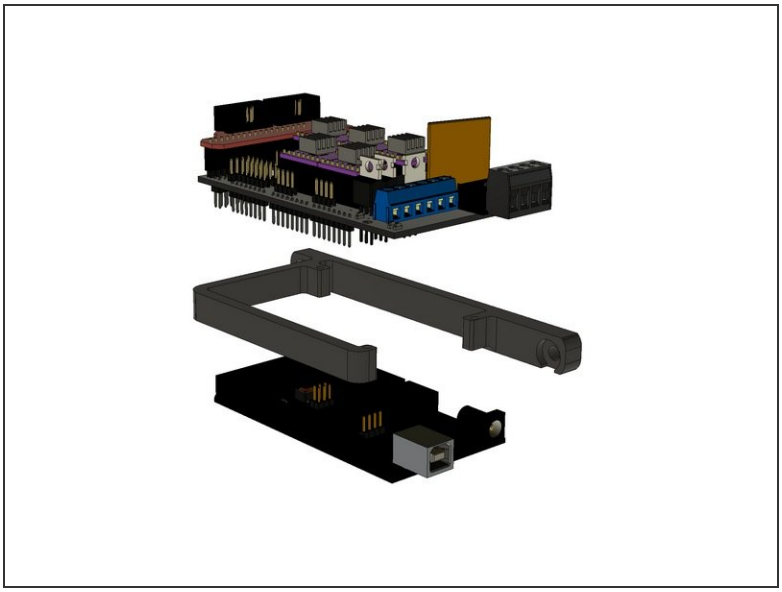

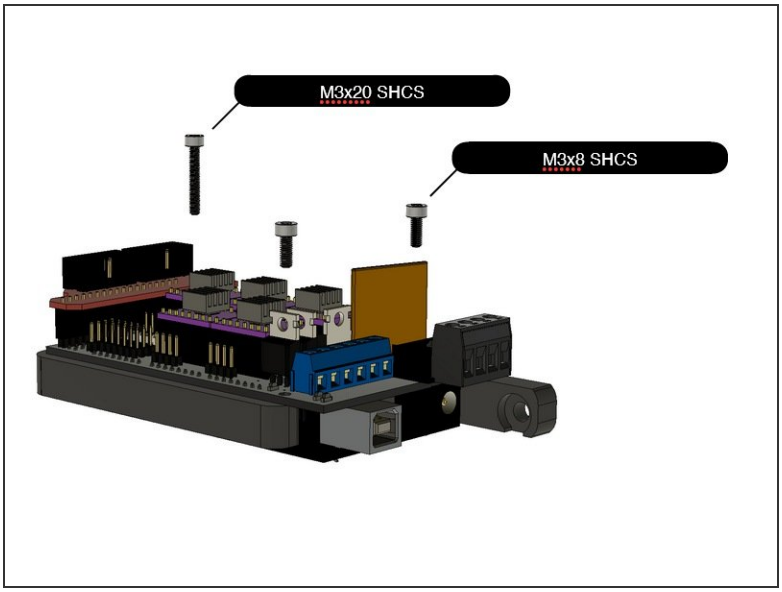

- Insert wisdom here.

Step 5 — Attach RAMPS to Frame

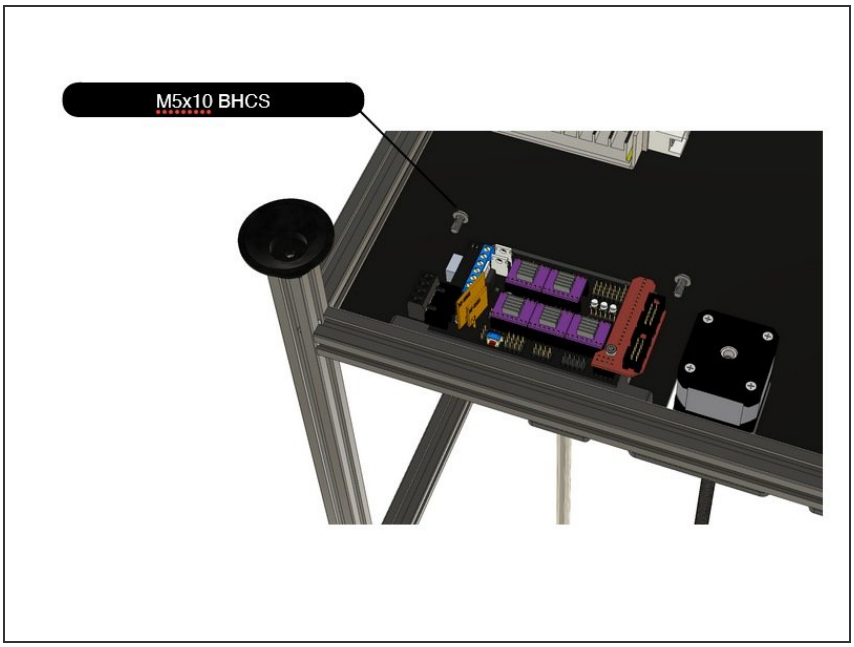

- Insert wisdom here.

Step 6 — Attach Skirts

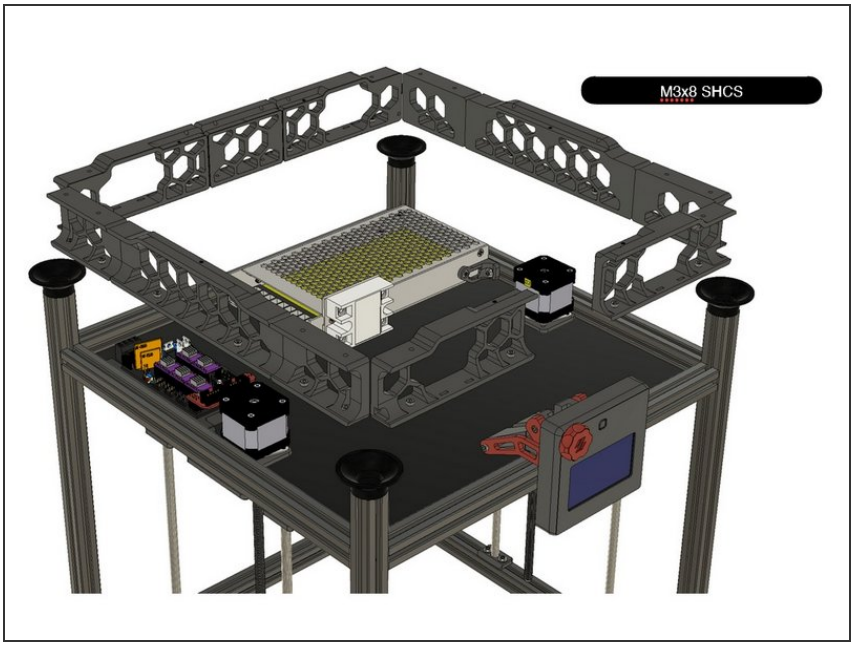

- Insert wisdom here.

Step 7 — Add AC Inlet

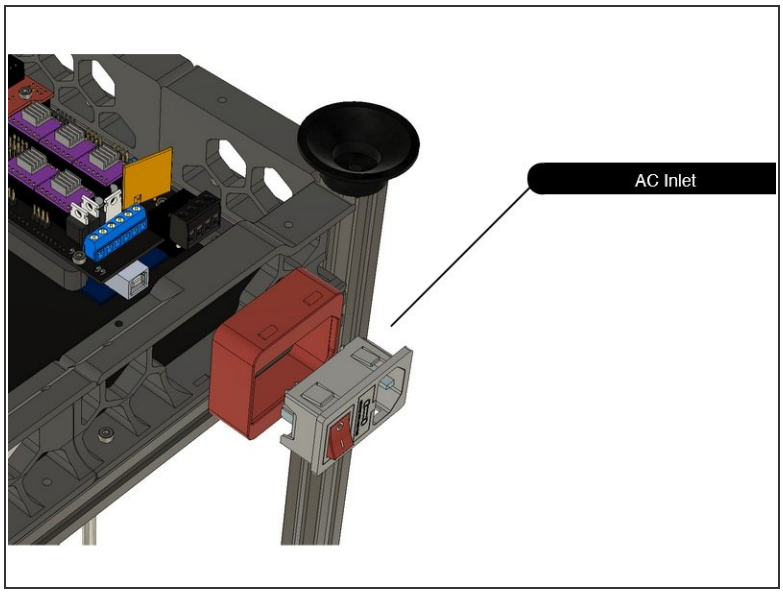

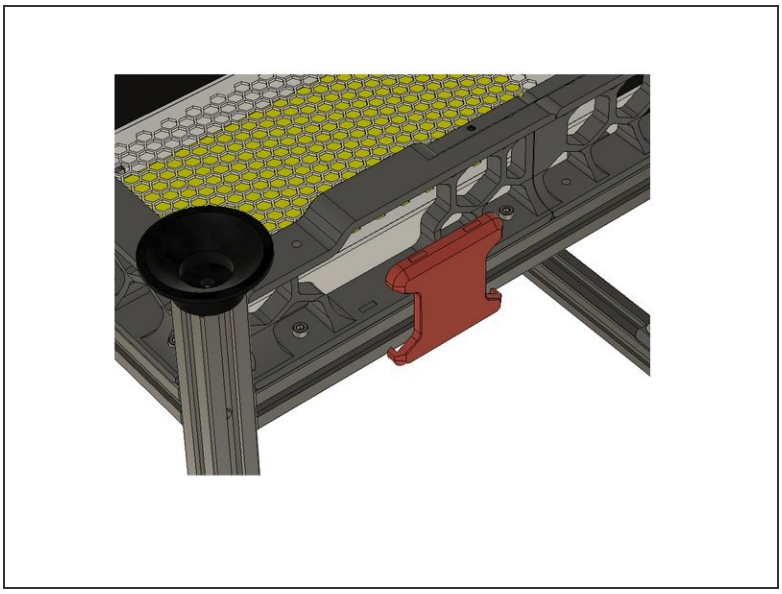

- Insert wisdom here.

Step 8 — Assemble Electronics Fan

- Insert wisdom here.

Step 9 — Attach Fan to Base Panel

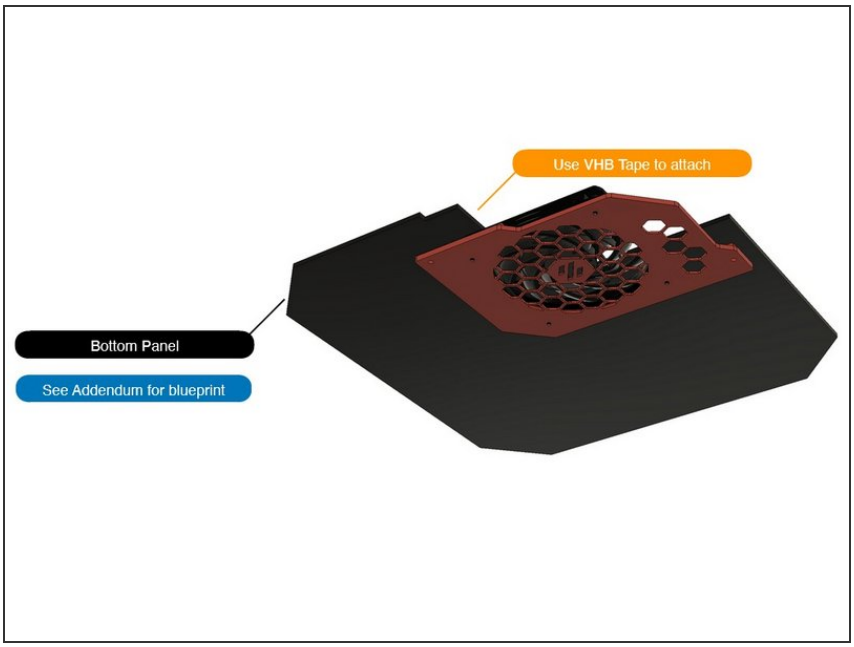

- Insert wisdom here.

Step 10 — Attach Base Panel to Skirts

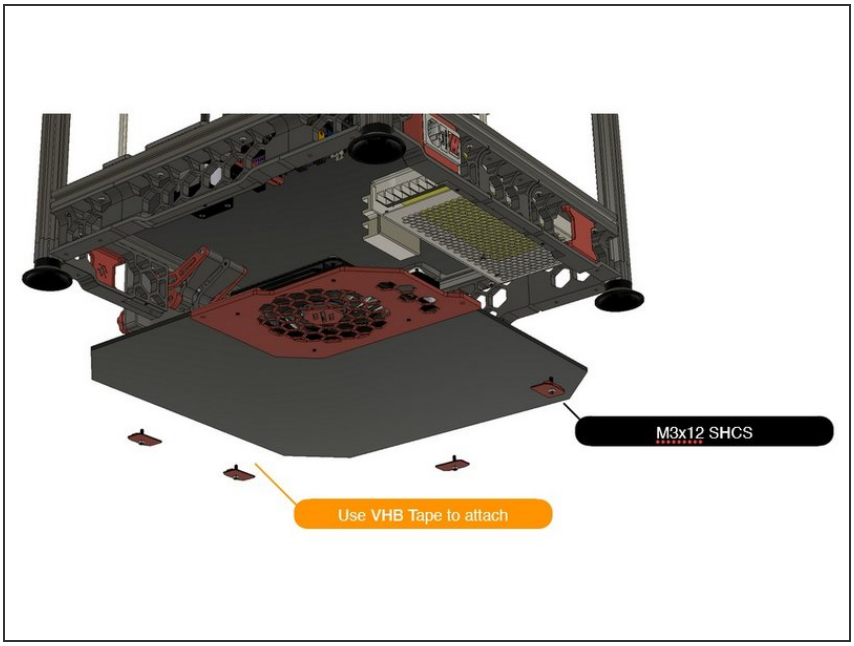

- Insert wisdom here.

Step 11

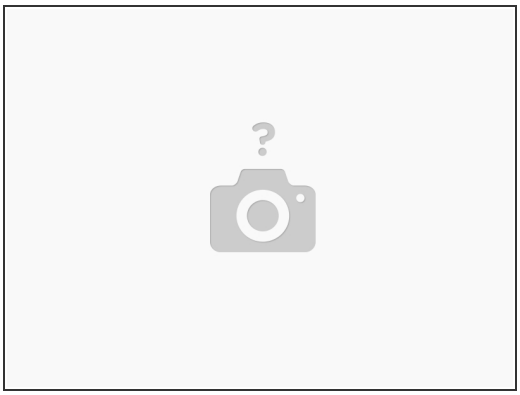

- Continue to the Panels/Extruder