Voron Design

09 - Assemble Bed Carrier

Written By: ArmyAg08

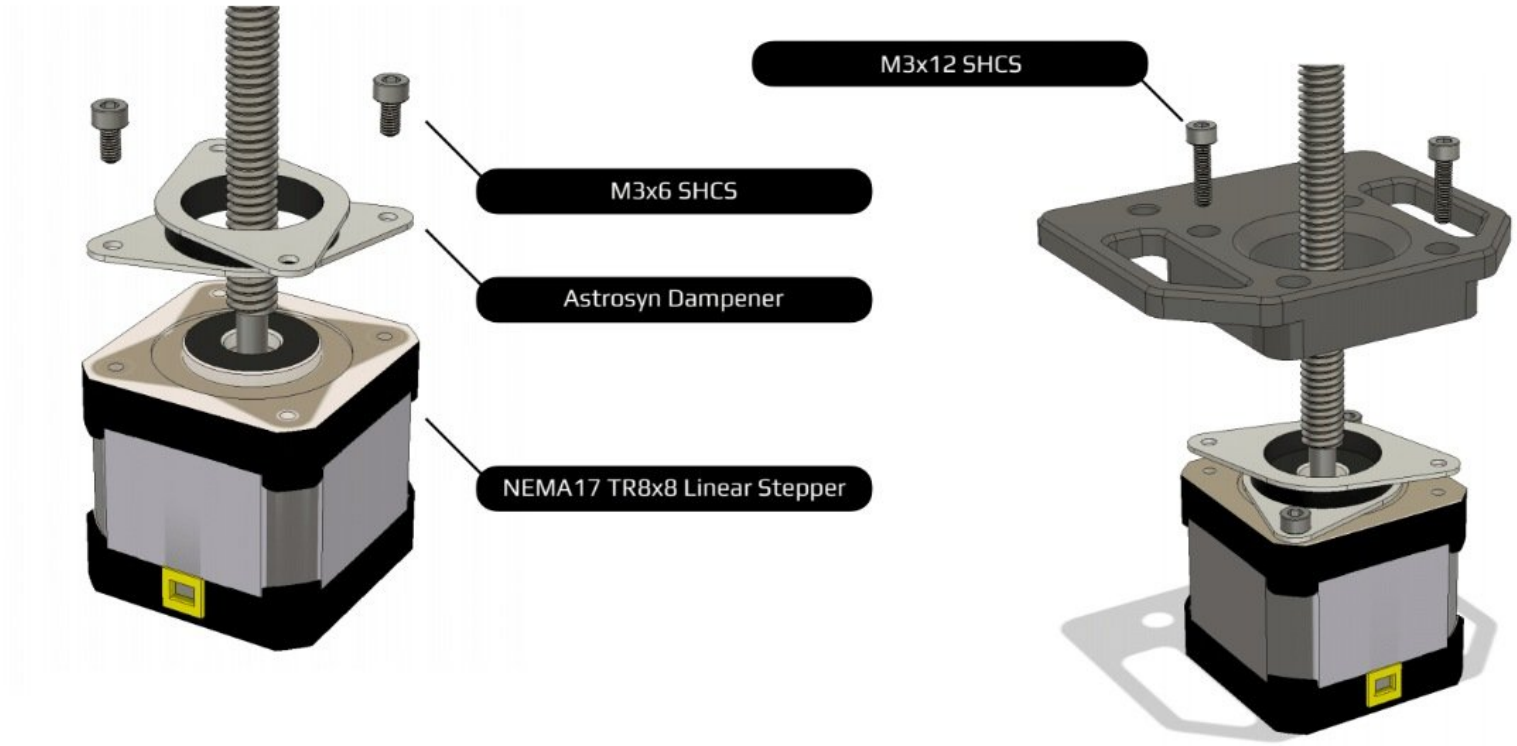

TOOLS:

- Allen Key Set (1)

PARTS:

- NEMA 17 Stepper w/ Lead Screw (2)
- Astrosyn Dampener (optional) (2)
- M3x6 SHCS (4)
- M3x12 SHCS (4)
- LM8LUU Bearing (4)
- 8x320mm Shaft (4)
- M5x10 BHCS (28)
- M5x16 BHCS (4)
- M3x8 SHCS (4)

© 2024

Step 1 — Assemble the Z Lead Screws

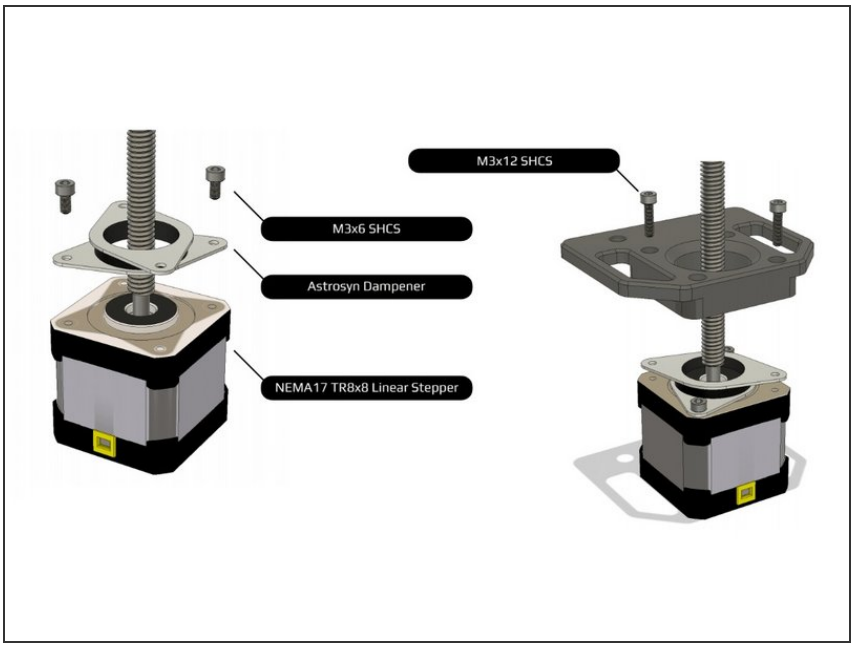

- Insert wisdom here.

Step 2

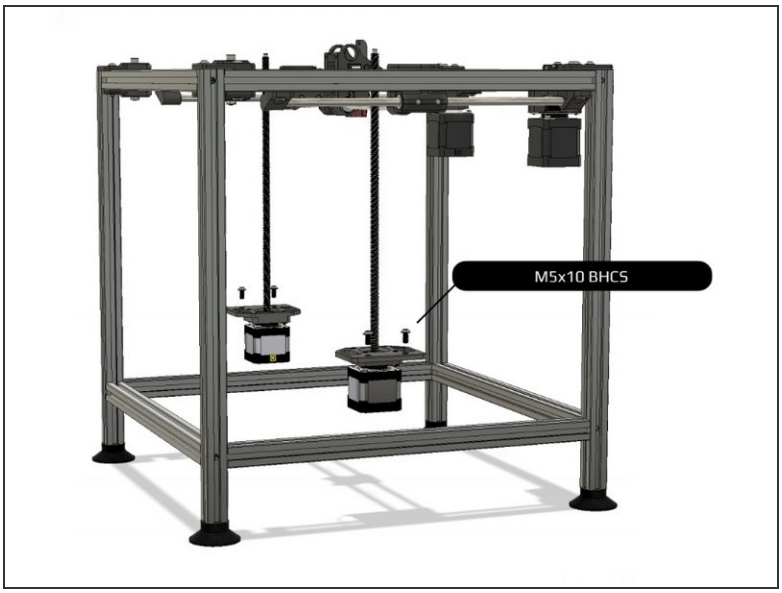

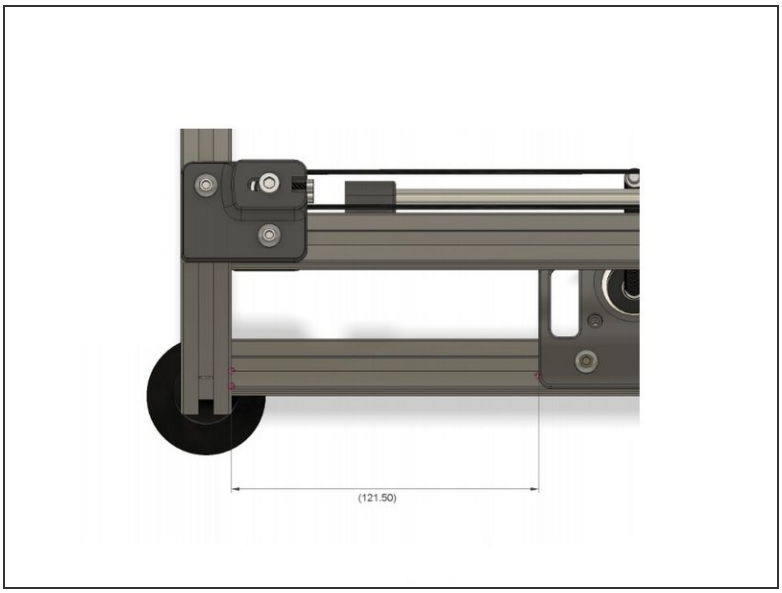

- Distance shown is from the front of the printer.
- Use calipers to measure placement.

Step 3 — Assemble Bed Carrier Mounts

- Insert wisdom here.

Step 4 — Attach 8mm Rods to Frame

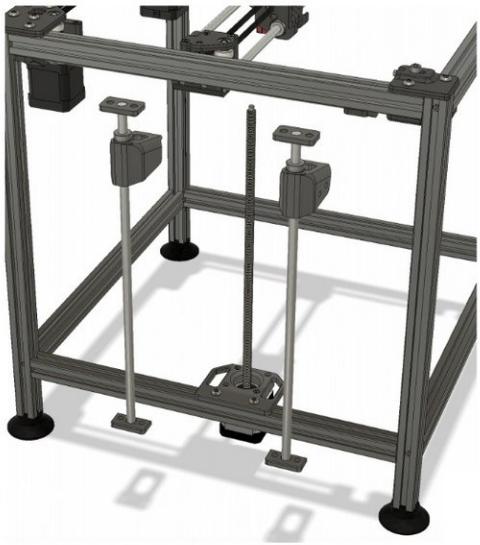

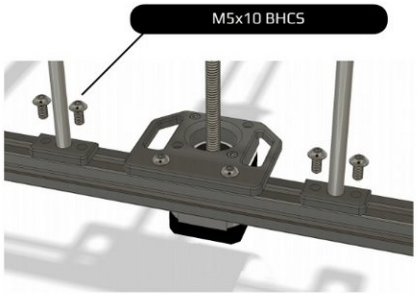

- New line.

Step 5 — Measure 8mm Rod Placement

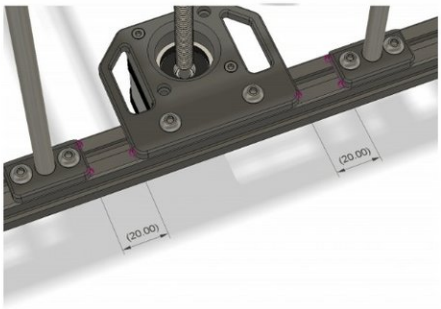

- Use calipers to measure 8mm rod placement.

Step 6 — Assemble the Bed Carrier

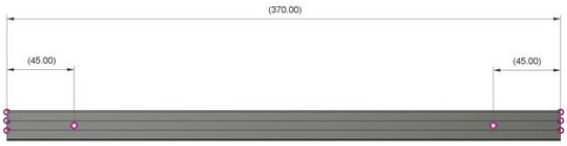

- Insert wisdom here.

Step 7 — Add Bed Carrier to the Frame

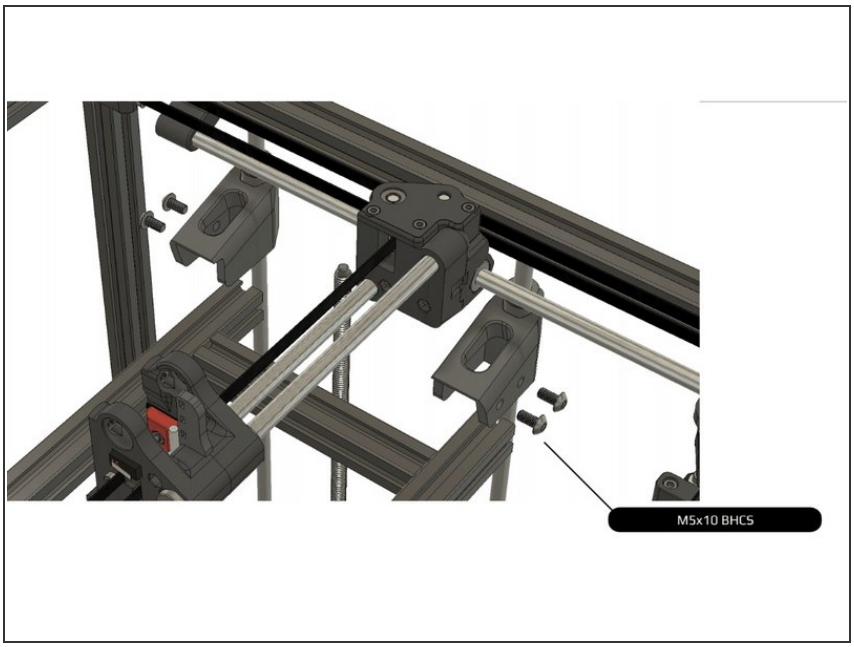

- Insert wisdom here.

Step 8 — Attach Bed Carrier to the Z Lead Screws

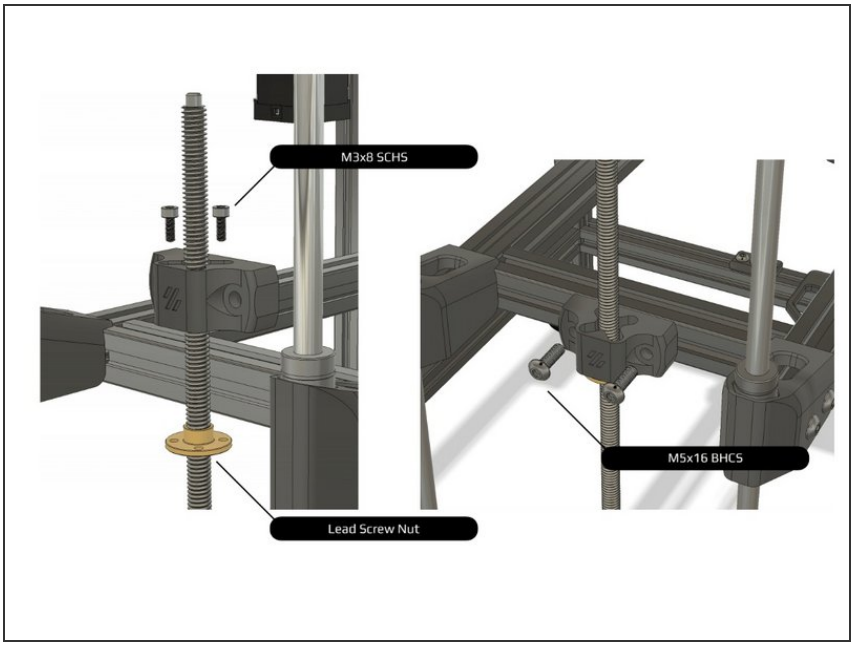

- Insert wisdom here.

Step 9

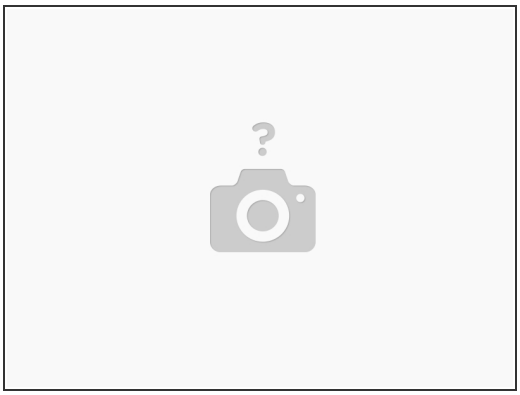

- Continue to the Tool Offset Switch