Voron Design

04 - X Carriage Assembly

Written By: ArmyAg08

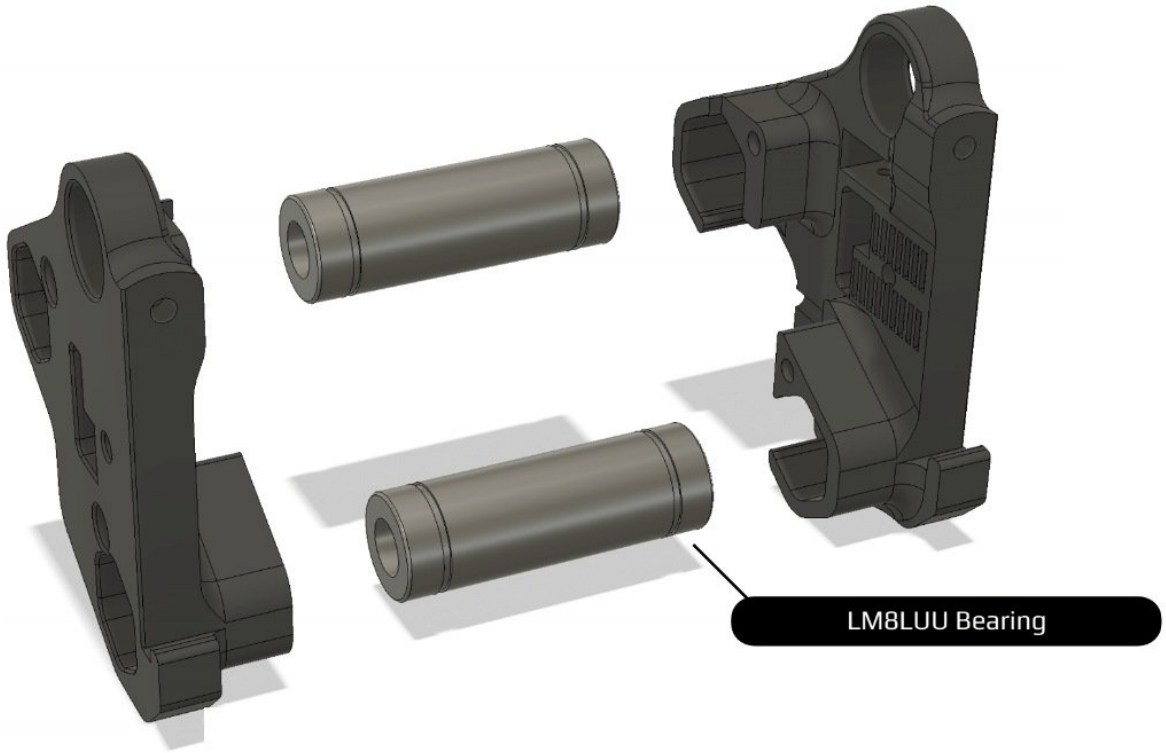

© 2024

TOOLS:

- Allen Key Set (1)

PARTS:

- M2x10 Self-Tapping Screw (1)
- M3x8 SHCS (2)
- M3x12 SHCS (2)
- M3x16 SHCS (2)
- M3x30 SHCS (2)
- M3 Hex Nut (6)
- LM8LUU Bearing (2)
- SPDT KW10 Micro Switch (1)
- Inductive Probe (1)

© 2024

Step 1 — Assemble Carriage Halves

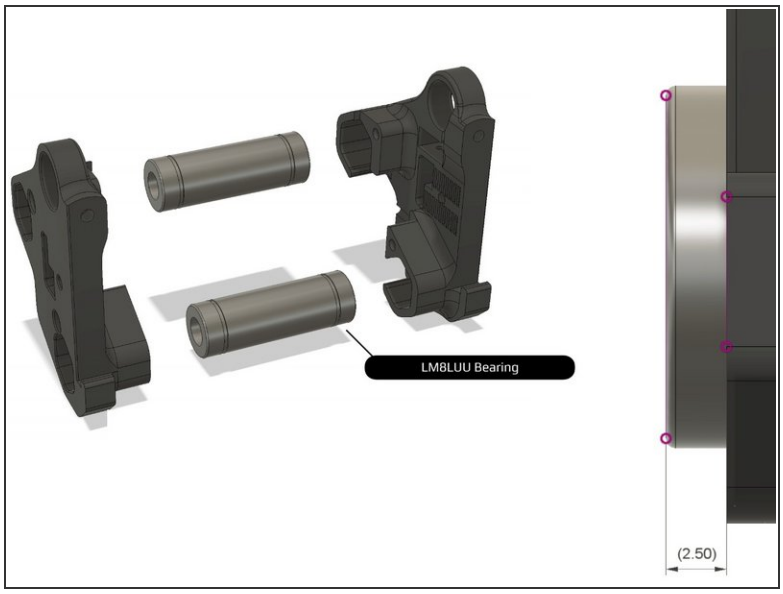

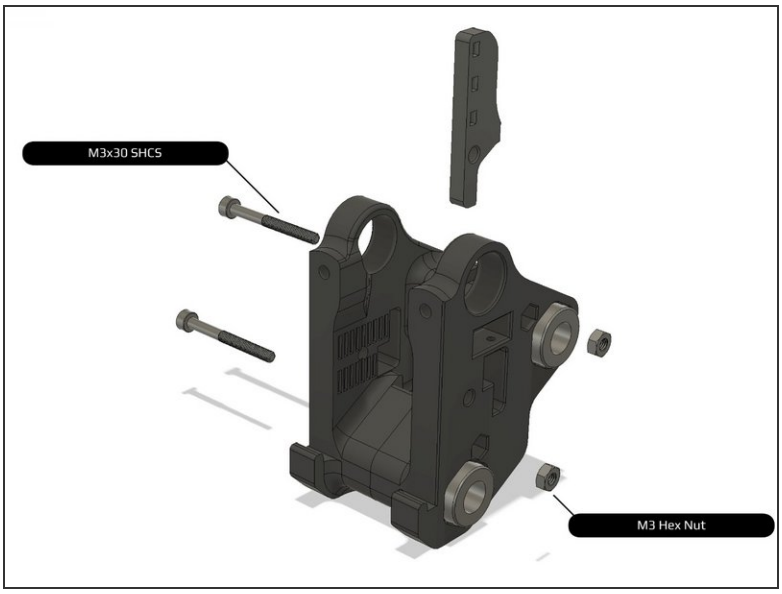

- Be careful not to crack the carriage pieces when inserting the bearings.

Step 2 — Add M3 Hex Nuts

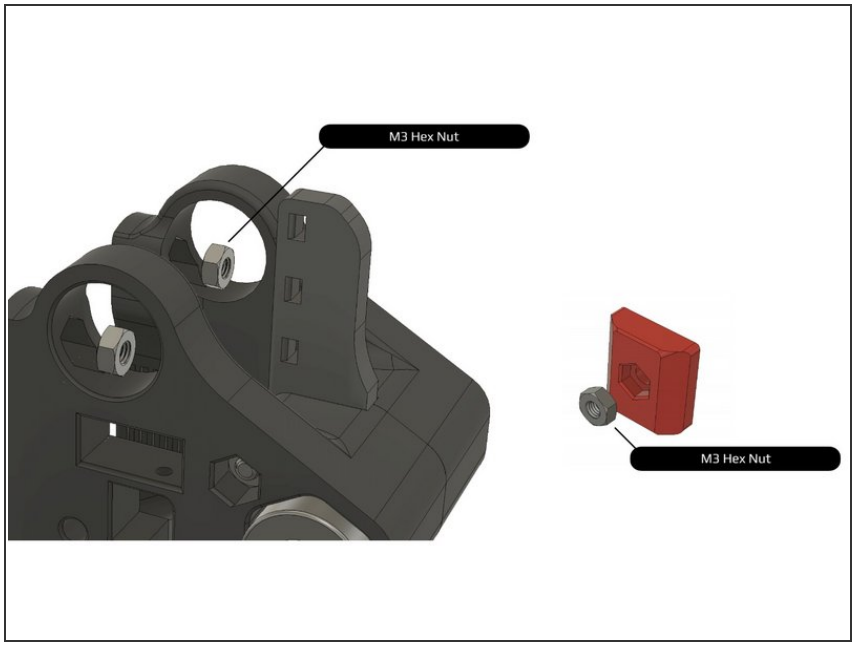

- The M3 nuts for securing the toolhead can fall out. They can be added later if necessary. Or secure

them in place with a short spare M3 bolt temporarily.

Step 3 — Assemble Inductive Probe

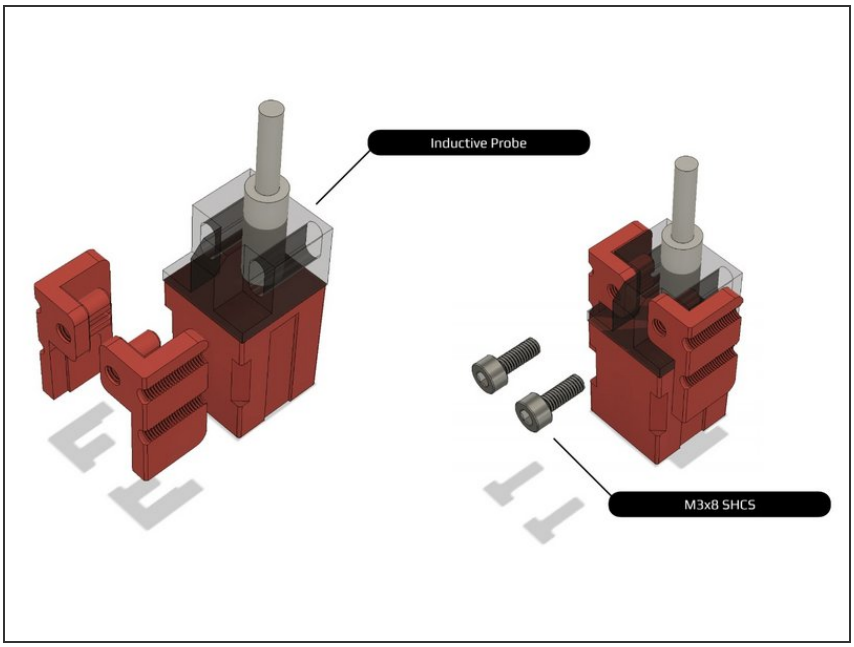

- If the probe tabs did not print cleanly, you may need to substitute M2 hardware, clean up the part with a hobby knife, or reprint the pieces.

Step 4 — Add Probe to Carriage

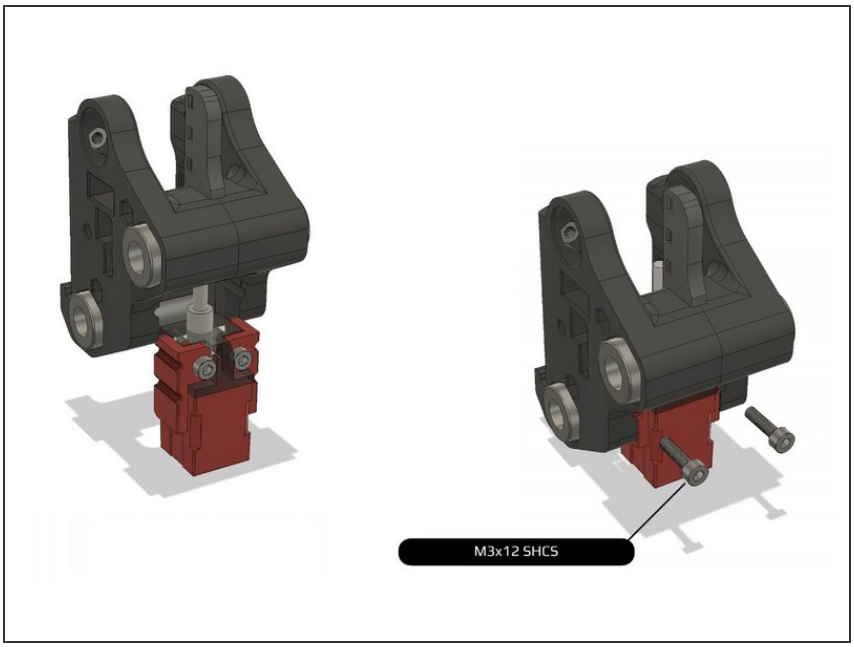

- Insert wisdom here.

Step 5 — Secure Belt Tabs

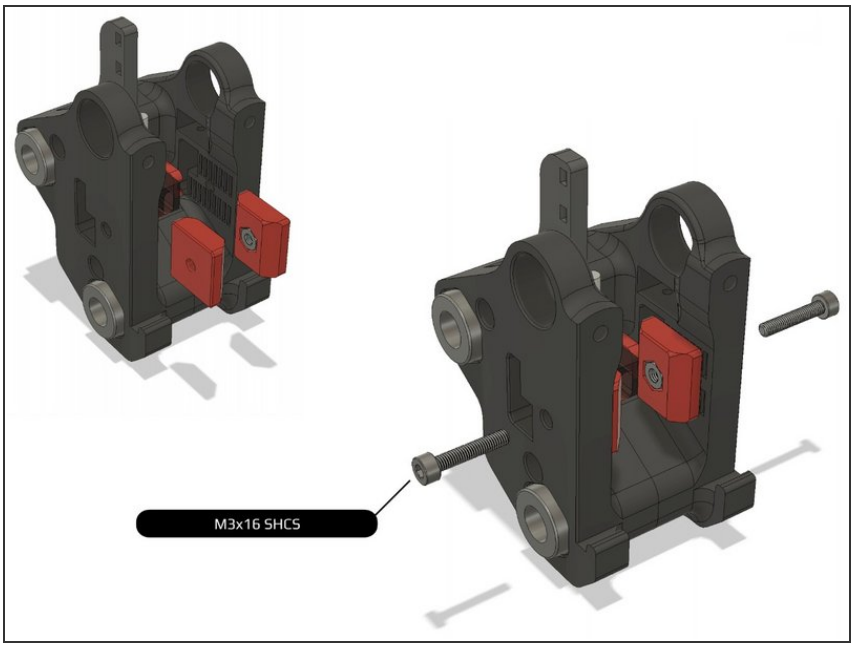

- Insert wisdom here.

Step 6 — Add X Endstop Switch

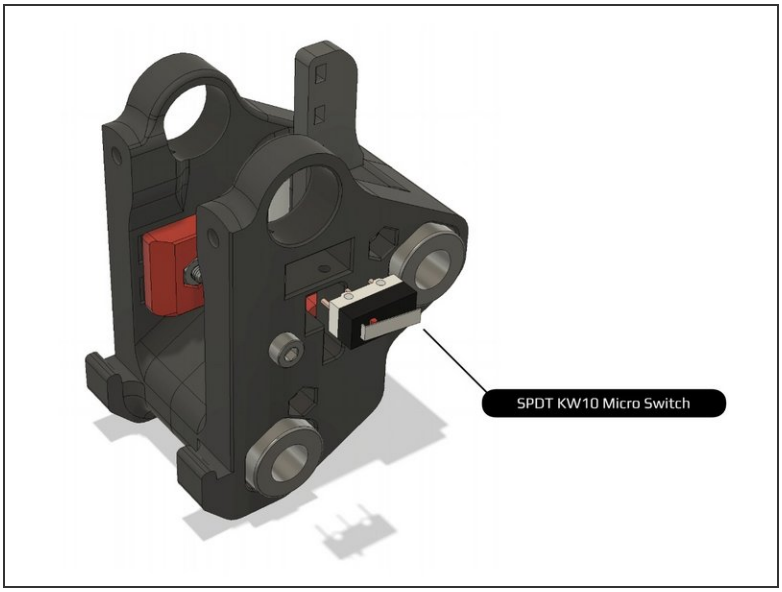

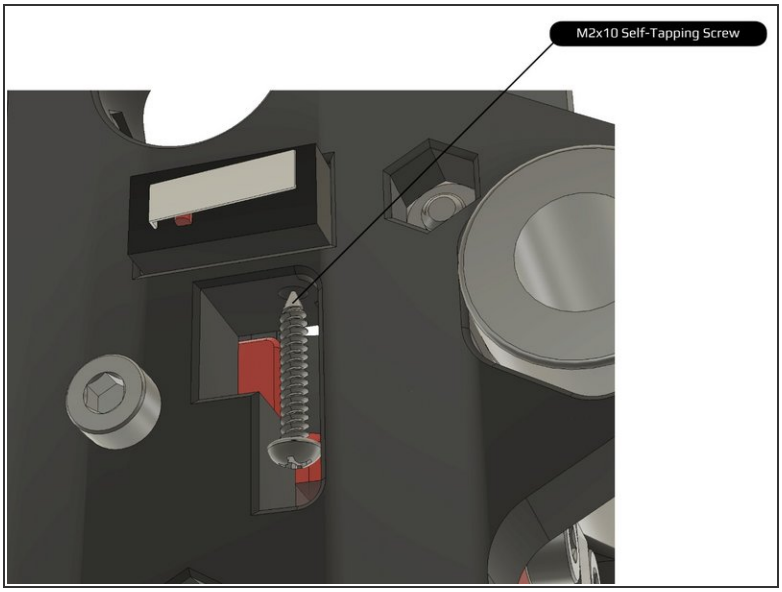

- Be sure to wire switch in the NC position.

Step 7

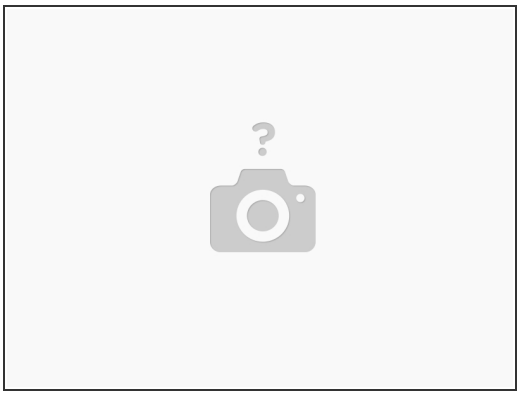

- Continue to the gantry assembly!