Voron Design

03 - X/Y Joint Assembly

Written By: ArmyAg08

Left XY Joint

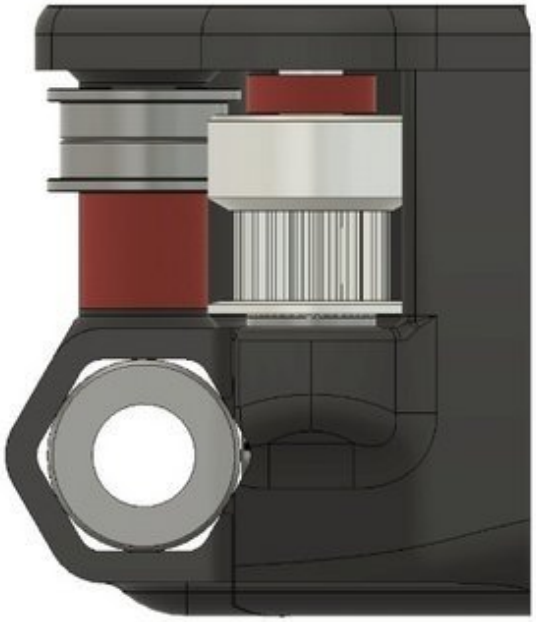

Right XY Joint

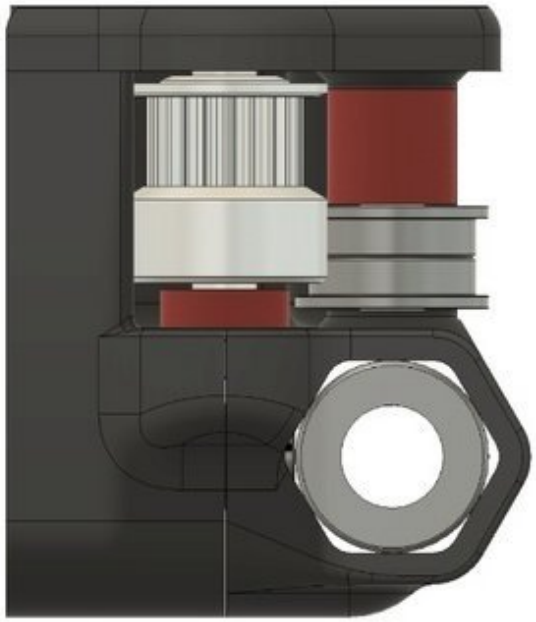

This document was generated on 2024-01-04 09:10:49 PM (MST).

TOOLS:

- Allen Key Set (1)

PARTS:

- M3x16 SHCS (4)
- M3x20 SHCS (2)
- M3x30 SHCS (4)
- M3 Hex Nut (4)
- F695 Bearing (8)
- GT2 20T Pulley (2)
- M5 Washer (2)
- 5x26mm Shaft (4)

© 2024

Step 1 — Assemble X/Y Joint Halves

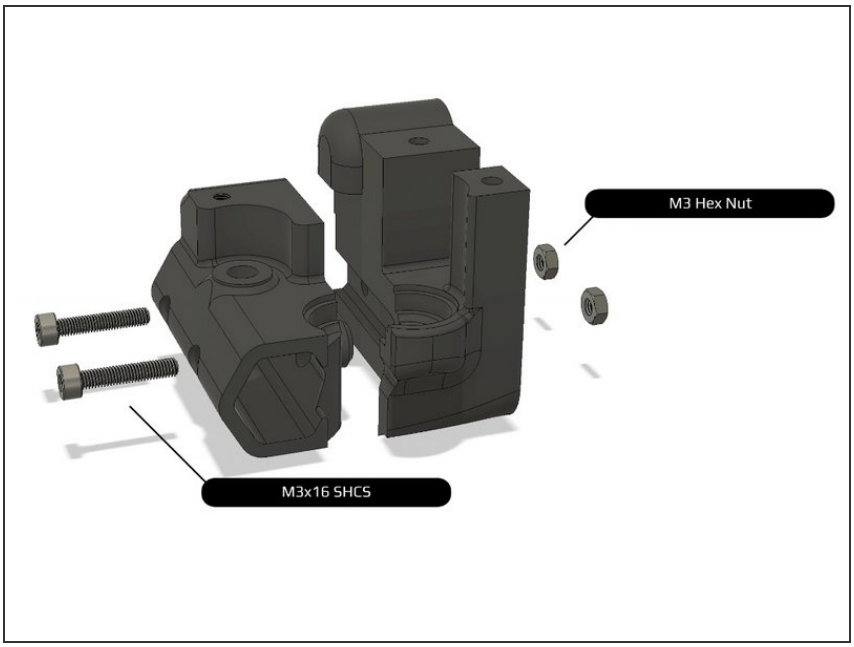

- Ensure the two halves mate cleanly or you can have twist along the X axis.
- Clean up parts with a hobby knife or small file if necessary.

Step 2 — Assemble the Idler Stacks

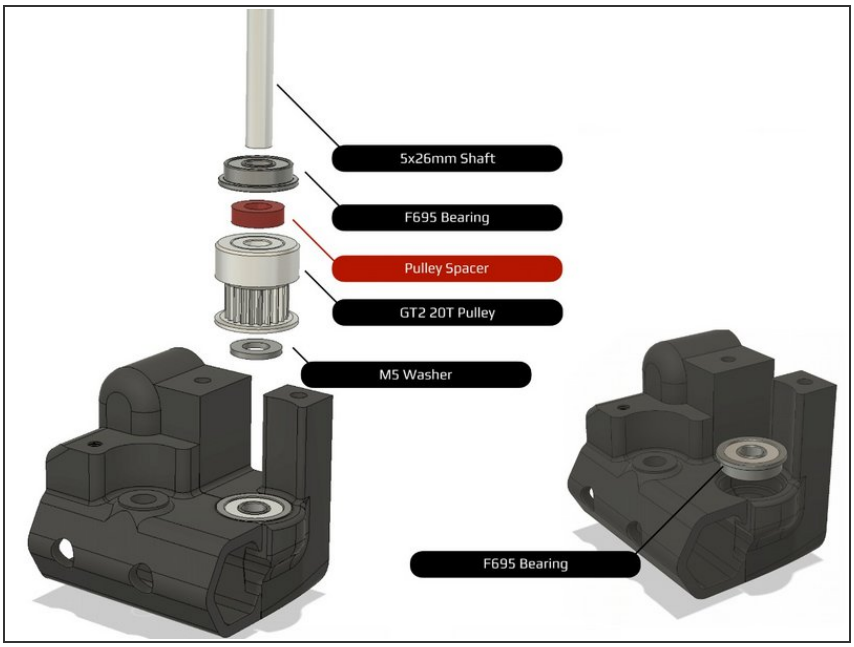

- Insert wisdom here.

Step 3 — Assemble Top Half of Joints

- Be careful not to over-tighten screws into plastic.

Step 4 — Add LM8LUU Bearing

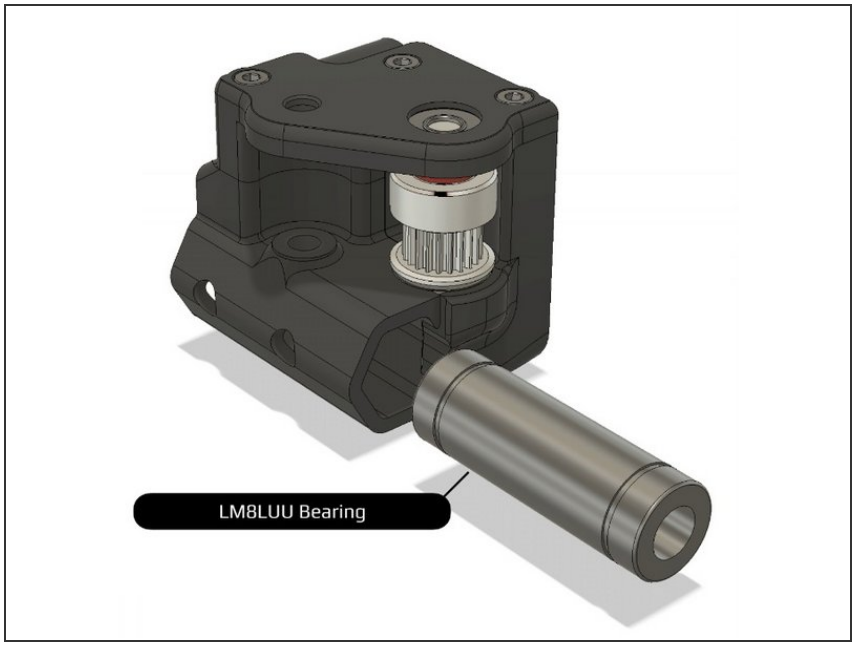

- LM8LUU bearing should fit snugly.
- You can use a c-clamp or similar tool to apply a slow and steady force to slide the bearing in if necessary.

Step 5 — Add Idler Stack

- Insert wisdom here.

Step 6 — Verify Assembly

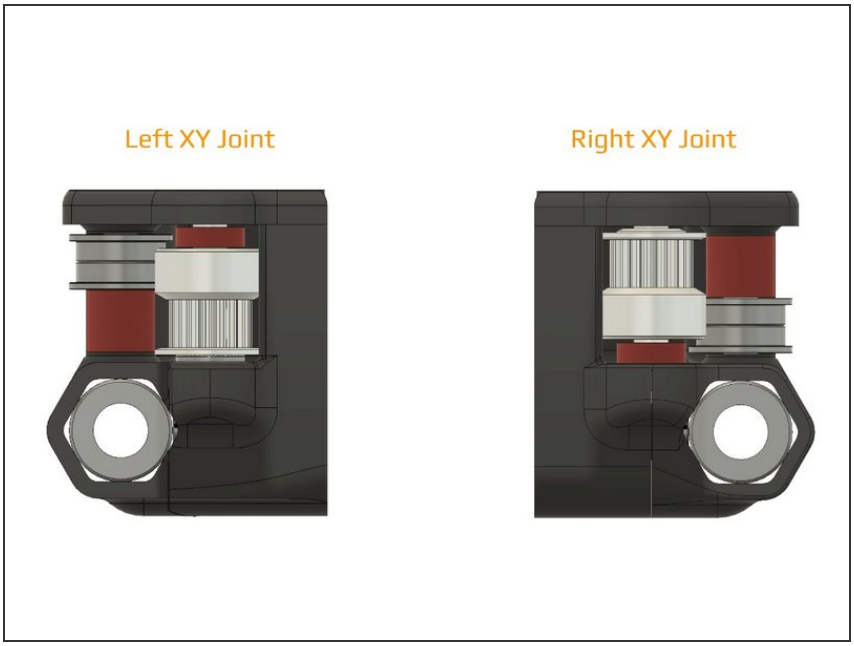

- Double check that your spacers and pulleys are located and oriented correctly.

Step 7

- Continue to the X carriage assembly!