Voron Design

02 - A/B Drive Assembly

Written By: ArmyAg08

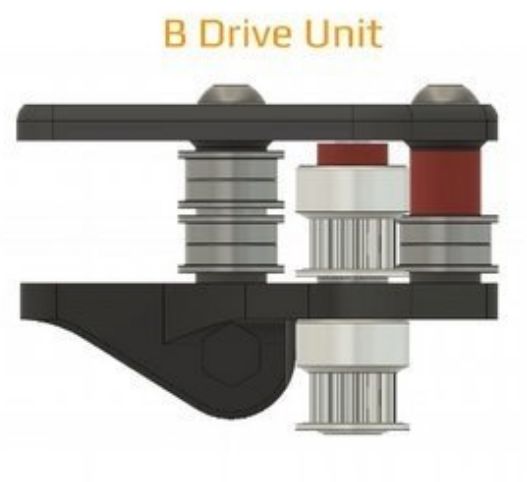

This document was generated on 2024-01-04 09:27:34 AM (MST).

TOOLS:

- Allen Key Set (1)

PARTS:

- 5x50mm Shaft (2)
- F695 Bearing (14)
- M5 Washer (4)
- GT2 20T Pulley (4)
- M5x30 BHCS (4)
- SPDT KW10 Micro Switch (1)
- M2x10 Self-Tapping Screw (2)
- M5x10 BHCS (10)
- M5 T-Nut (10)

Step 1 — Assemble the A/B Drive Stacks

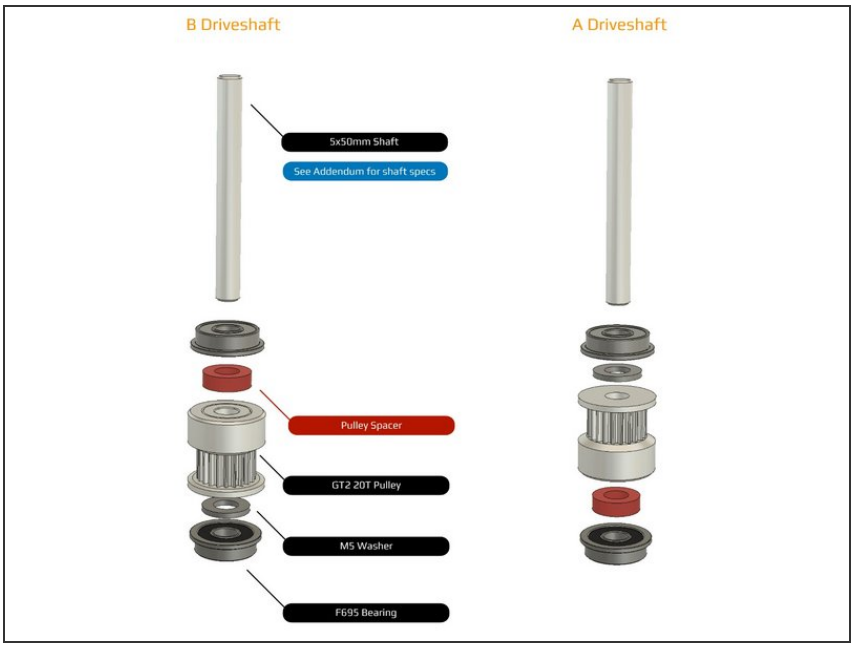

- It's easiest to run a flat down the length of the entire 5mm shaft.
- The flat only needs to be deep enough for the grub screw to catch and not slip.
- When your pulleys are in place, **be sure to loctite your grub screws.**

Step 2 — Assemble the A/B Drive Units

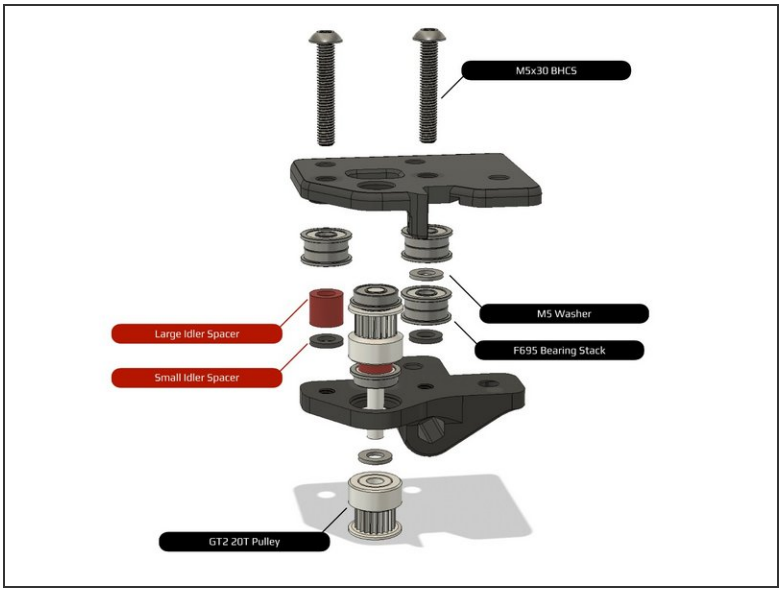

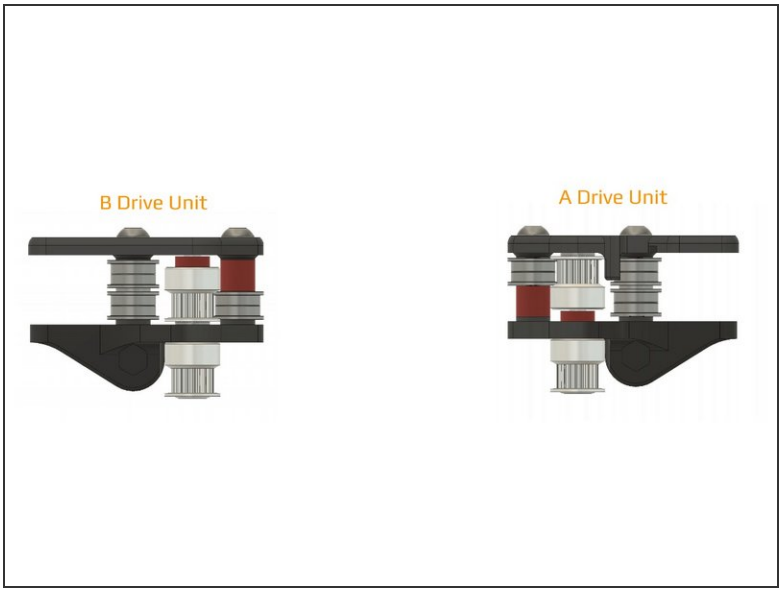

- Add the drive stacks to the printed pieces along with another 20t pulley to lock the stack into place.

Step 3 — Add the Y Endstop

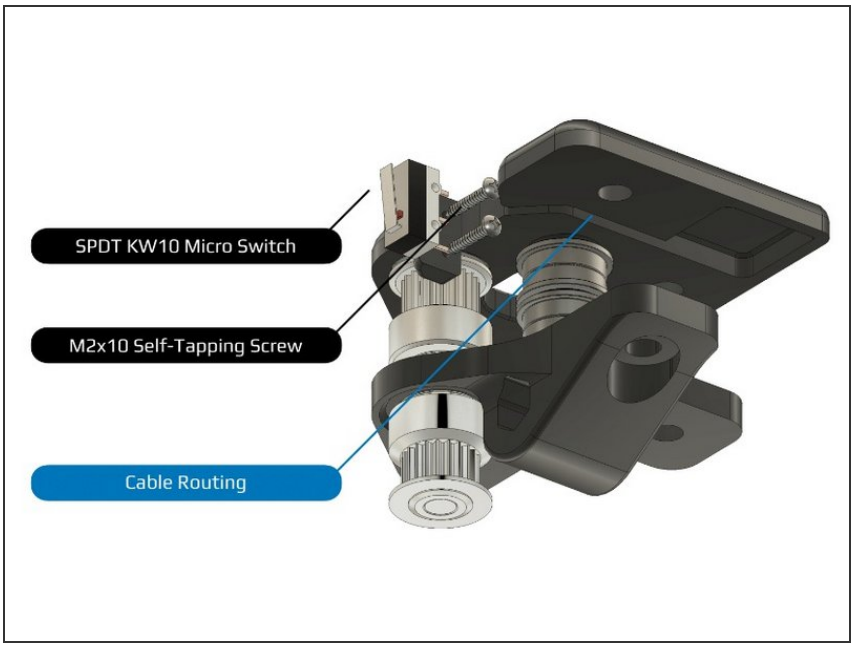

- Be sure to wire the micro switch as NC (Normally Closed). On most switches this means connecting wires to the outer two terminals on the switch, but you can check with a multimeter by making sure there is continuity at those pins when the switch is not pressed.
- Add a vertical line to the 20t pulleys in each stack so you can troubleshoot slipping grub screws easily.

Step 4 — Add A/B Drives to Frame

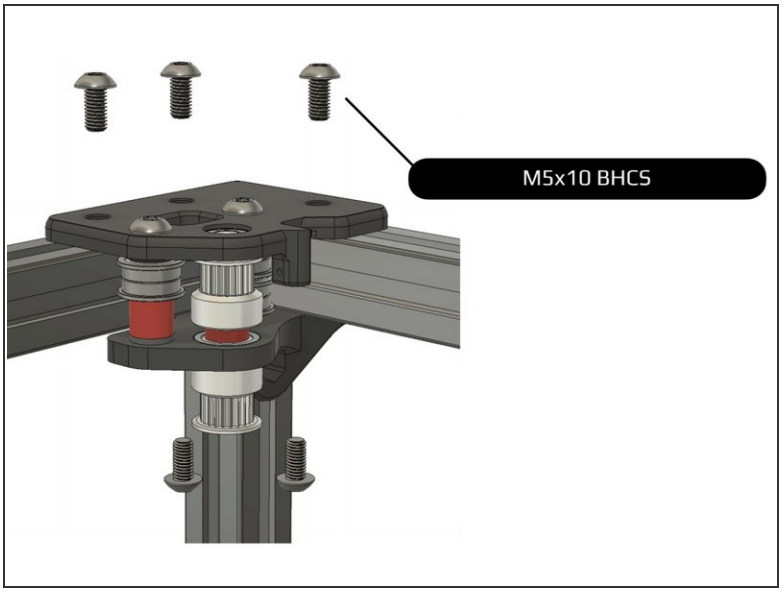

- The assembly with the micro switch attaches to the right side of the frame.
- Be sure to run wiring through the channel and be careful to not damage it while tightening.

Step 5

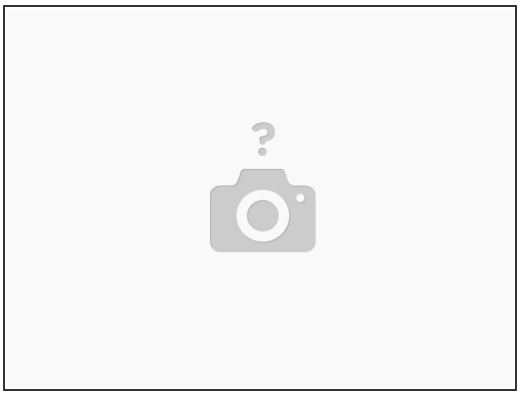

- Continue to the X/Y joint assembly!